Lake Encroachment Permit Application Narrative

Vermont Statutes Title 29, Chapter 11 Management of Lakes and Ponds
§ 402(3)

Vermont Green Line Project
Lake Champlain

Prepared for:

Vermont Green Line Devco, LLC
401 Edgewater Place, Suite 650
Wakefield, MA 01880

Prepared by:

TRC Environmental Corporation
Wannalancit Mills
650 Suffolk Street
Lowell, MA 01854

December 2016

Table of Contents

1.0 PROJECT DESCRIPTION 1

1.1 INTRODUCTION AND BACKGROUND 1

1.2 UNDERWATER CABLE ROUTE 1

1.3 METHODS AND EQUIPMENT 3

1.3.1 Pre-lay Grapnel Run and Surface Lay 4

1.3.2 Jet Plow Trenching 4

1.3.3 Horizontal Directional Drilling 6

1.4 OPERATIONAL DESCRIPTION 9

1.4.1 Cable System Reliability and Maintenance 10

1.5 PROJECT SCHEDULE 10

2.0 PUBLIC BENEFITS 11

2.1 INFRASTRUCTURE BENEFITS 11

2.2 ECONOMIC BENEFITS 11

2.3 LAKE-SPECIFIC AND OTHER ENVIRONMENTAL BENEFITS 12

3.0 PUBLIC TRUST DETERMINATION 13

3.1 PUBLIC TRUST DETERMINATION PART 1: EXTENT OF ENCROACHMENT 13

3.1.1 Project Purpose 13

3.1.2 Alternatives Analysis 13

3.1.3 Best Management Practices (BMPs) 14

3.1.4 Placement/Removal of Fill 14

3.2 PUBLIC TRUST DETERMINATION PART 2: EFFECT OF STATUTORY CRITERIA 15

3.2.1 Water Quality 15

3.2.2 Fish and Wildlife Habitat 18

3.2.4 Navigation 19

3.2.5 Recreation and Public Use 20

3.2.6 Consistency with Natural Surroundings 21

3.2.7 Consistency with Applicable Shoreland Zoning Ordinances 21

3.2.8 Consistency with Applicable State Plans 22

3.3 PUBLIC TRUST DETERMINATION PART 3: POTENTIAL CUMULATIVE EFFECT 23

4.0 SUMMARY AND CONCLUSIONS 24

4.1 PART 1 24

4.2 PART 2 25

4.3 PART 3 25

5.0 REFERENCES 26

Figures

Figure 1. Underwater Cable System Materials Composition 3

Figure 2. Underwater Cable Trench Detail 5

Figure 3. Underwater Cable Burial Process 6

Figure 4: HDD Landfall Drilling Operation 7

Figure 5. Gravity Cell Detail 8

Figure 6: HDD Landfall Pipe Pulling Operation 9

Tables

Table 1 Anticipated Project Schedule 10

Appendices

Location	Attachment	Document	Preparing Agent	Date
Appendix I	a	Application Form	TRC	Nov. 3, 2016
	b	Project Overview Map	TRC	May 25, 2016
	c	Lake Route Overview Map	TRC	Aug. 18, 2016
	d	Marine Route Plan and Profiles	Cornerstone	Oct. 14, 2016
	e	Conceptual Submarine Cable Crossing and Concrete Mattress Typical	PSC	Nov. 7, 2016
	f	Photographic Log (CD)	TRC	Mar. 25, 2015
Appendix II	a	License Agreement with Kingsland Bay	TRC/Kingsland Bay	Sept. 22, 2016
	b	Abutting Landowners Map	TRC	July 8, 2016
	c	Abutting Land Owner Addendum	TRC	July 8, 2016
Appendix III	a	HDD Inadvertent Return Contingency Plan	TRC	Sept. 14, 2016
	b	Water Quality Monitoring Plan	TRC	Oct. 14, 2016
	c	Aquatic Invasive Species Spread Prevention Plan	TRC	July 26, 2016
	d	Thermal Monitoring Plan	TRC	Aug. 1, 2016
Appendix IV	a	Alternatives Analysis	TRC	Sept. 19, 2016
	b	Sediment and Benthic Assessment Report	TRC	Feb. 22, 2016
	c	Sediment Dispersion and Deposition Modeling Study	Hodge Water Resources, LLC	July 25, 2016

Location	Attachment	Document	Preparing Agent	Date
	d	Benthic Macroinvertebrate Sample Analysis Report	ESS Group, Inc.	Jan. 19, 2016
	e	Freshwater Mussel Survey Report	Biodrawversity, Inc.	July 6, 2016
	f	Water Temperature Gradients around Proposed VGL Submarine Cables	Exponent	July 26, 2016
	g	Magnetic Field Assessment for Proposed VGL Subterranean and Submarine Cables	Exponent	Sept. 26, 2016
	h	Surface Laying and Deep Water Intake Review Memo	TRC	Oct. 17, 206
	i	Phase I Archaeological Assessment - Lake Portion	Lake Champlain Maritime Museum	Mar. 1, 2016

Acronyms

BMP	Best Management Practice
CPG	Certificate of Public Good
DP	Dynamically Positioned
EPC	Engineering, Procurement, and Construction
HDD	Horizontal Directional Drilling
HDPE	High Density Polyethylene
HVAC	High Voltage Alternating Current
HVDC	High Voltage Direct Current
HWR	Hodge Water Resources
ISO-NE	Independent System Operator of New England
kV	kilovolt (1,000 volts)
mG	milligauss
mg/L	milligrams per Liter
NYPA	New York Power Authority
NECPL	TDI New England Clean Power Link
ROV	Remotely Operated Vehicle
ROWs	right-of-ways
SAV	submerged aquatic vegetation
SPCC Plan	Spill Prevention, Control, and Countermeasure Plan
TMDL	Total Maximum Daily Load
TRC	TRC Environmental Corporation
USEPA	U.S. Environmental Protection Agency
VELCO	Vermont Transco, LLC and Vermont Electric Power Company
VGL or the Project	Vermont Green Line Project
VGLD	Vermont Green Line Devco, LLC
V.S.A.	Vermont Statutes Annotated
VT DEC	Vermont Department of Environmental Conservation
VT FWD	VT Fish and Wildlife Department
VT PSB	Vermont Public Service Board
VT SWMS	Vermont Surface Water Management Strategy

1.0 PROJECT DESCRIPTION

Vermont Green Line Devco, LLC (VGLD), is proposing a 400 megawatt (MW) high voltage direct current (HVDC) electric transmission line project, the Vermont Green Line Project (the Project), to be constructed between the existing New York Power Authority (NYPA) Plattsburgh Substation in Beekmantown, New York, and the Vermont Electric Power Company (VELCO) New Haven Substation in New Haven, Vermont. The Vermont segment of the Project is located within Lake Champlain (depicted on the Lake Route Overview Map, Appendix I, Attachment c), as well as on town and state road right-of-ways (ROWs) in the Towns of Ferrisburgh, Waltham, and New Haven, Vermont (depicted on the Project Route Overview Map, Appendix I, Attachment b).The information contained within this report is specific to the portion of the Project's Underwater Cable Route within Vermont.

1.1 INTRODUCTION AND BACKGROUND

The Project involves the installation, operation, and maintenance of an underwater and underground HVDC transmission line, a new converter station, and a short underground high voltage alternating current (HVAC) transmission line to connect the Project to the Independent System Operator of New England (ISO-NE) power grid via the VELCO New Haven Substation. The HVDC Cable System will consist of two solid dielectric-type cables for electric transmission that do not contain insulating oils or fluids and one fiber optic cable for the purposes of transmitting data to control and monitor the line.

A portion of the Project will include the installation of HVDC cable below the mean water level of Lake Champlain, which is considered an encroachment and is prohibited without first obtaining a Lake Encroachment Permit. Through the following narrative and supporting documentation, provided in support of the enclosed Vermont Department of Environmental Conservation (VT DEC) Lake Encroachment Permit Application Form, VGLD hereby applies for a Lake Encroachment Permit under Chapter 11, Management of Lakes and Ponds, of Title 29 of the Vermont Statutes, for the Vermont Green Line Project.

The Applicant submitted a Petition for a Certificate of Public Good (CPG) including prefiled testimony and exhibits to the Vermont Public Service Board (VT PSB) on October 21, 2016.

1.2 UNDERWATER CABLE ROUTE

The total length of the Project's Underwater Cable System is approximately 40.2 miles, with approximately 4.9 miles within New York waters. The Underwater Cable System would be designed for and initially operated at a voltage of ±150 kV DC.

VGLD has proposed the Underwater Cable Route based on in-water surveys to avoid sensitive benthic communities, cultural resources (e.g., ship wrecks), and significant geological and geotechnical features, such as large rock outcrops, that could interfere with construction and operation of the Project; these efforts are detailed in the Phase I Archaeological Assessment – Lake Portion (Appendix IV Attachment i) and the Sediment and Benthic Assessment Report (Appendix IV, Attachment b). The route avoids or mitigates potential economic, environmental, and social impacts on Lake Champlain. Within the lake, the Project will temporarily impact navigation and recreational areas during construction activities only, and will follow a schedule that aims to minimize these impacts; please refer to Section 3.2 for further information regarding these temporary impacts. The majority of the Underwater Cable Route is proposed in deeper sections of the lake, located away from the shoreline.

Certain areas, such as known fisheries, steep slopes, and archaeological resources, have been avoided to the extent possible during route design. To minimize lakebed and shoreline disturbance to the greatest extent possible when compared to conventional dredging methods, proposed construction methodologies for the installation of the Underwater Cable System include: self-burial of the cable through surface lay installation; state-of-the-art jet plow technology; and by utilizing the horizontal directional drilling (HDD) construction method.

The HVDC transmission line will leave New York and enter Vermont under Lake Champlain near the Town of Grand Isle, and will run underwater in Vermont for 35.3 miles to the shore of Kingsland Bay State Park (Underwater Cable Route). At Kingsland Bay State Park, the line will make landfall using HDD and will continue underground largely beneath or adjacent to public roadways for approximately 13.2 miles from Ferrisburgh to New Haven (HVDC Land Route). In New Haven, the line will connect to a new converter station located on private property southeast of the junction of Route 7 and Route 17. The converter station will convert power delivered by the transmission line from direct current to alternating current. From there, approximately 0.23 mile of underground HVAC cable will be installed to deliver power from the converter station to the VELCO New Haven Substation where it will interconnect with the regional grid (HVAC Land Route). The planned Underwater Cable Route is shown in Appendix I, Attachment c.

To minimize lakebed disturbance to the greatest extent possible, where the Underwater Cable Route runs from the New York/Vermont border south to the west of Thompson Point (Station 2372+20, close to milepost 45.0 - depicted in Appendix I, Attachment d, Marine Route Plan and Profiles), the Underwater Cable System will be surface-laid on the lakebed and allowed to self-bury in water depths greater than 150 feet.

In general, south of Thompson Point, jet plow technology will be utilized where water depths are between approximately 30 feet (Station 2450+88, proximate to milepost 46.0) to 150 ft. However, to ensure safe and effective equipment operation, and due to the slope of the lake bottom approaching Kingsland Bay (Station 2372+20), VGLD will use jet plow installation technology in this area to bury the Underwater Cable System at a mean water depth of approximately 388 feet.

To avoid impacts to public uses in Kingsland Bay, disturbance of productive shallow water habitats, and disturbance of the shoreline, VGLD proposes to use HDD to install the Underwater Cables from a location where lake mean water depth is approximately 30 feet (Station 2450+88, proximate to milepost 46.0) under the lake shoreline to an on-land location approximately 235 feet setback from the shoreline. The HDD exit location in Kingsland Bay will be underwater and construction will occur within a temporary gravity cell to minimize the extent of dredging and associated water quality impacts during excavation.

The Marine Route Plan and Profiles (Appendix I, Attachment d) represent a proposed alignment of the Underwater Cable Route, and is offered for the purposes of understanding the potential impacts associated with the construction, operation, and maintenance of the Project; certain aspects or areas may be adjusted following more detailed design work necessary for the final construction plans. Additionally, at this stage in the planning process, VGLD has not selected an Engineering, Procurement, and Construction (EPC) contractor, whose expertise may further enhance the detailed design of the Project. Construction-level engineering will not be initiated until after all state and federal approvals have been received, to ensure compliance with all regulatory requirements.

1.3 METHODS AND EQUIPMENT

The Underwater Cables will be transported by ocean-going freighter from the overseas manufacturing facility to a port facility located on the East Coast of the United States. VGLD will then off-load the Underwater Cables onto several specially built barges designed to transit the canal system. VGLD will then move the cable transport barges through the Champlain canal system to the mobilization area. Because access to Lake Champlain from the Hudson River is constrained by the physical dimensions of the canal system, the majority of the vessel and barge components, and installation equipment will be transported by truck to a mobilization area located on the lake shore. At the mobilization area, the vessels and equipment will be assembled into a functional cable laying barge.

The Underwater Cable System will consist of two ±150 kV DC Underwater Cables along with an underwater fiber optic cable. The cables will be designed and operated at ±150 kV DC. The individual DC Underwater Cable will have an approximate conductor size of 1950 millimeter (mm^2) with an overall cable diameter of approximately 4.7 inches. Each DC Underwater Cable will make landfall through a High Density Polyethylene (HDPE) conduit installed via HDD. The DC Underwater Cables will be bundled together with the underwater fiber optic cable. In general, the Underwater Cable System will be buried by jet plow when water depths are less than 150 feet, and surface-laid and self-buried on the lakebed when water depths are greater than 150 feet. Figure 1 shows a cross section of the Underwater Cable System.

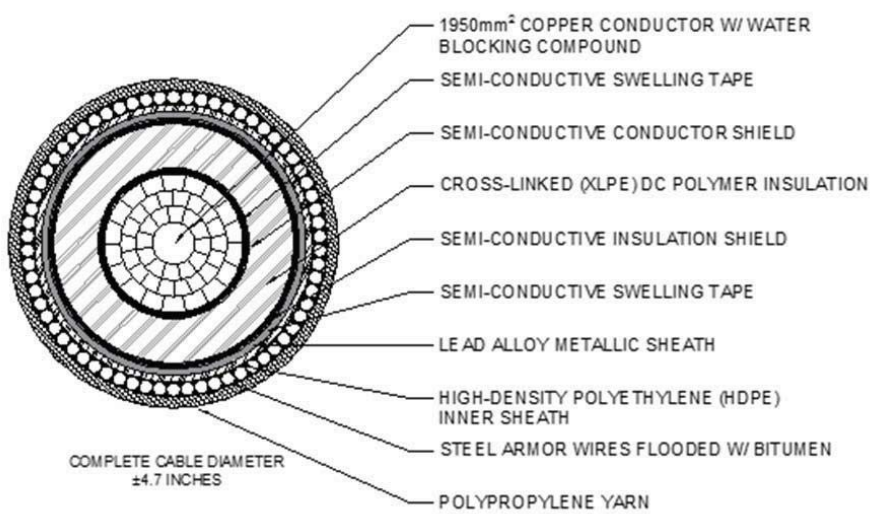

Figure 1. Underwater Cable System Materials Composition

After the EPC contractor has been selected by VGLD, and prior to construction start, a work plan will be prepared and submitted to the Department outlining the specific vessel and project equipment staging, docking, maintenance, mobilization, and fueling locations, as well as the approximate number and size of vessels to be used for Project construction. Any adjustments associated with potential impacts to the lake with regards to public trust or public good will be submitted for approval by the Secretary in the event that modifications to the permit are necessary.

1.3.1 Pre-lay Grapnel Run and Surface Lay

Prior to installing the Underwater Cables, a pre-lay "grapnel run" will be performed along the entire route to clear debris such as nets, ropes, wires, etc., so that cable laying and burial activity may be completed with minimal hindrance, operational risk, or threat to the cables during installation. The grapnel will be towed from a vessel equipped with a full navigation system. Depending on bottom conditions, it is expected that the grapnel will penetrate between 12 and 24 inches into the lakebed to remove both surface and buried debris. During grapnel towing operations, the winch-line tension will be continuously monitored to identify when the grapnel has encountered any substantial debris. The grapnel will be hoisted back to the vessel at regular intervals, and also when tension monitoring indicates possible debris collection on the grapnel. Any recovered items will be collected and disposed of in accordance with proper standards and practices. If construction activities were to uncover previously undiscovered archaeological or historical resources, work on the Project would be suspended and VGLD would proceed in accordance to the Project's plan for the unanticipated discovery of archaeological or historical resources, to be developed by a cultural resource consultant prior to construction. Small items may cling to the equipment or cable during construction activities. However, there will be no permanent removal of aquatic plants or animal life, trees, rocks, woody debris, stumps, or historical sawn logs during construction activities without advance approval from the State of Vermont. Additionally, in accordance with the Aquatic Invasive Species Spread Prevention Plan (Appendix III, Attachment c), aquatic invasive species will not be knowingly moved into a different area of the lake or removed from the lake. In the event that aquatic invasive species are inadvertently removed from the lake due to their attachment to equipment or cables during construction, they shall be removed and disposed of in a manner that will not cause reintroduction into the lake or any other waters.

Cable installation will be performed using a Dynamically Positioned (DP) cable laying barge. The laying barge will be equipped with redundant navigation systems and propulsion systems, along with numerous lay monitoring and control systems. The barge will also be equipped with the required systems to perform simultaneous lay and burial installation using a jetting device.

Real time supervision of the cable tension and speed along with remote monitoring with a submersible Remotely Operated Vehicle (ROV) will be used during the laying operations. As soon as practicable after construction, vertical and horizontal as-built locations for the HVDC Cable system will be fully documented and provided to the U.S. Coast Guard for inclusion on navigational charts.

The laying barge will lay out the cables and simultaneously attach temporary floats to them so they can be positioned at the mouth of the previously installed conduits (i.e., at the HDD exit location). A pulling rope will be attached to each of the cable ends so it can be pulled through the conduit onto the land. One of the high voltage cables will also include the underwater fiber optic cable. As the cable is slowly pulled into the conduit, the temporary floats will be removed, allowing the cable to be submerged and enter the conduit. Cable splicing will occur on the lay barge. Small marine support vessels and divers will assist the entire operation.

1.3.2 Jet Plow Trenching

Jet plow embedment methods utilize simultaneous lay and bury installation ensuring placement of the cable bundle at a target burial depth of at least 4 feet below the existing lakebed. Jet plowing underwater cable systems is considered to be the most effective and least environmentally impactful method of cable installation when compared to traditional mechanical dredging, cable lay, and

backfilling operations. Jet plow embedment minimizes disturbance to the lakebed, provides for rapid cable installation, and achieves cable burial that minimizes navigational and recreational impacts.

In water less than 150 deep, VGLD will bury the Underwater Cables using jet plow technology, which uses pressurized water injected into the sediments to "fluidize" the sediments to create a vertical area of unconsolidated sediments approximately 4-foot deep by 2-foot wide. The jet plow is fitted with hydraulic pressure nozzles that create a downward and backward flow within the sediments, allowing the transmission cables to settle into the sediments under its own weight before the sediments re-consolidate. Figure 2 provides a schematic of the jet plow burial configuration.

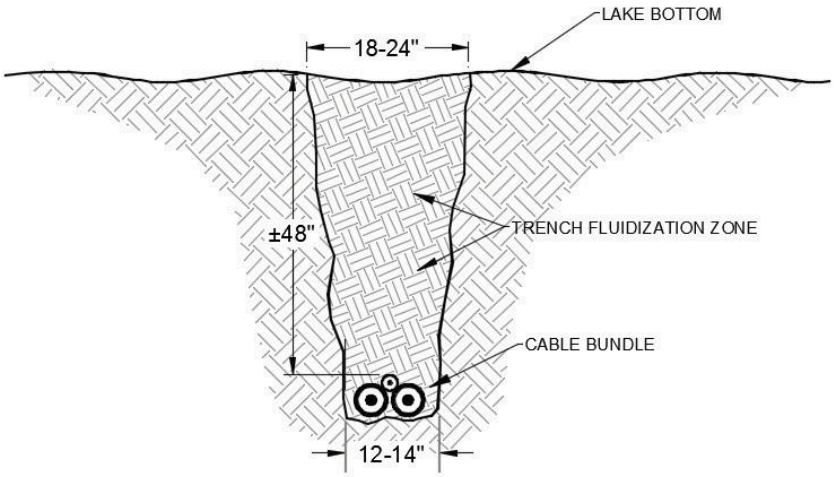

Figure 2. Underwater Cable Trench Detail

The cables will be installed at least 4 feet below the existing lakebed between Station 2372+20, close to milepost 45.0 and Station 2450+88, proximate to milepost 46.0. This will be accomplished by simultaneous lay and bury operations using a specially designed jet plow. If the 4 foot depth cannot be achieved based on lake bottom conditions, VGLD will consult with the applicable authorities about how to proceed. The two HVDC cables along with the fiber optic cable will be bundled together on the barge deck and fed down through the jet plow blade. The jet plow blade is equipped with nozzles that fluidize the lakebed sediments *in situ*, allowing the cables to be buried as the plow is towed forward. Diesel pumps located on the barge deck will supply the nozzles with pressurized lake water through an umbilical down to the plow. The entire plowing operation will be controlled in real time using numerous sensors and monitoring systems, maximizing the plow rate while minimizing turbidity. Necessary adjustments to nozzle pressure, rate of advancement, and cable tension will be made to account for changes in sediment types and densities. The use of simultaneous lay and bury installation minimizes the disturbance to the lakebed. Figure 3 shows the details of the installation process.

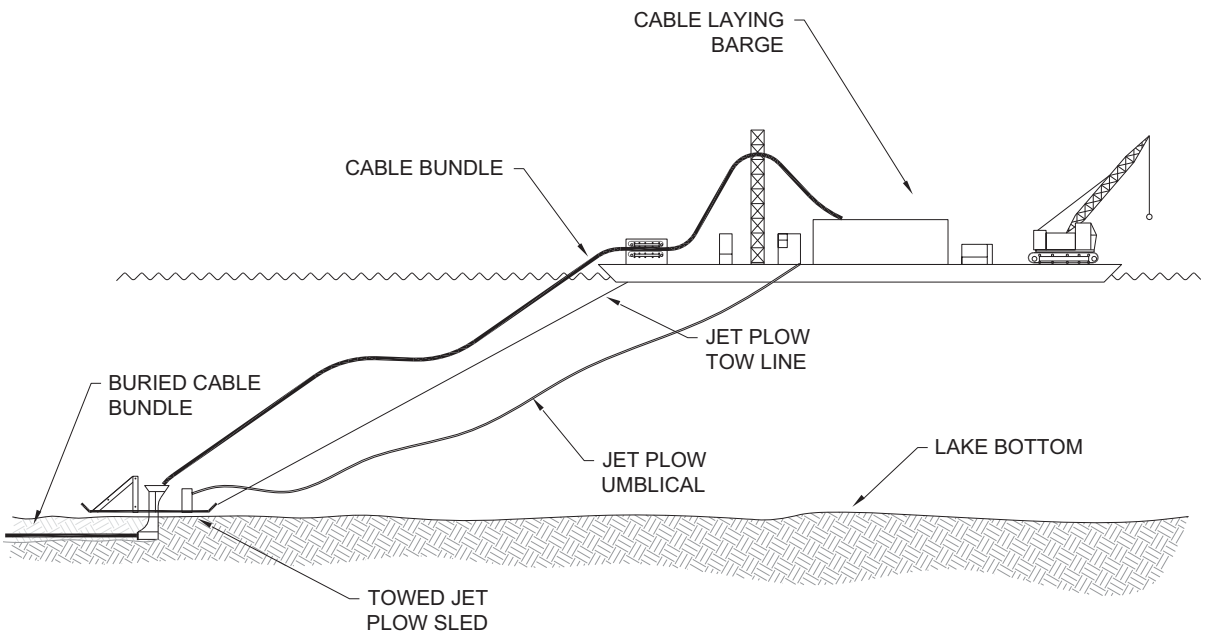

Figure 3. Underwater Cable Burial Process

The skid-mounted jet plow will be lowered to the lakebed and towed by a barge, because the plow has no propulsion system. For burial, the barge will tow the plow at a safe distance as the laying and burial operation proceeds (Appendix I, Attachment d, Marine Route Plan and Profiles). The transmission cables will be deployed from the vessel to a funnel device on the plow. The plow blades (with jetting nozzles) will cut into the sediments while it is towed along the pre-cleared route to carry out a simultaneous lay and burial operation. The cable system location and burial depth will be recorded during installation for use in the preparation of as-built location plans. The jet plow device is equipped with horizontal and vertical positioning equipment that records the laying and burial conditions, position, and burial depth. This information is monitored continually on the installation barge/vessel.

VGLD anticipates regularly scheduled dives in order to monitor the cable installation operation and inspect the condition of the cable trench and jet-plow. Due to the short burial lengths, it is highly unlikely that the jet-plow will require maintenance during cable burial operations. All routine maintenance required to be performed on submarine equipment shall be conducted while the equipment is on the barge deck.

1.3.3 Horizontal Directional Drilling

VGLD proposes to use HDD to install the HVDC Cable System at the Lake Champlain landfall location to avoid impacts to the lake shoreline and nearshore habitat in Kingsland Bay State Park. The land-to-water HDD method is very similar to land-to-land methods, except that the exit location will be underwater and a temporary gravity cell will be installed to minimize water quality impacts during excavation down to the target burial depth of 4 feet below the lakebed. The general sequence of each HDD installation consists of completing the drill path, reaming the drill path to the proper diameter, and installing the conduit. Figure 4 shows a diagram of the HDD operation.

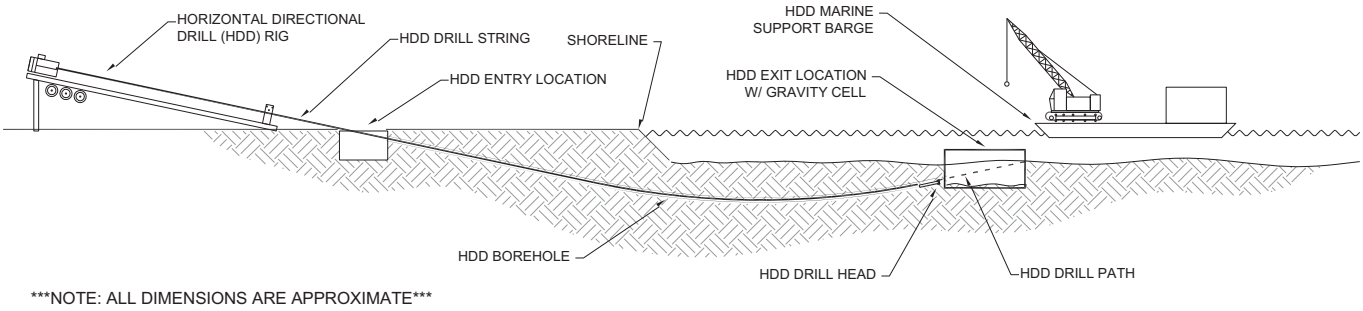

Figure 4: HDD Landfall Drilling Operation

Prior to beginning HDD operations, VGLD will install a temporary gravity cell that will be placed over the HDD exit point. The temporary gravity cell will be installed approximately 2,000 feet away from the Vermont shoreline of Lake Champlain in water depths of approximately 30 feet. The temporary gravity cell will be centered over the lake-side exit location of the HDD in order to minimize water quality impacts during construction. The gravity cell location also represents the starting point for jet plow installation of the Underwater Cables. The location of the gravity cell was developed based on a number of factors including the need for water depths greater than 10 feet and the physical limit of how far the Underwater Cables can be pulled through an HDD conduit.

The temporary gravity cell serves two primary functions: to help minimize the size of the excavated area at the exit location, and to contain any bentonite slurry that may otherwise escape into the water column during the HDD operation. The use of HDD minimizes the potential risk of impacts to water quality as drilling takes place beneath the sediments in the lake bottom. However, during reaming and pipe (conduit) pulling operations, small amounts of bentonite slurry may escape from the borehole exit point. VGLD has developed an HDD Inadvertent Return Contingency Plan (Appendix III, Attachment a) to address this contingency. Although the bentonite slurry is a mix of naturally occurring clay and water, it is not normally found in the lakebed. In addition, because bentonite is heavier than water, most released bentonite will clump and sink to the bottom of the dredged temporary gravity cell. VGLD will deploy a diver to monitor the temporary gravity cell during the HDD operation and monitor any release of bentonite in the temporary gravity cell. The diver will be in constant communications with the marine support barge and will be equipped with a vacuum system to collect any bentonite releases. In the unlikely event of bentonite release, the procedures outlined in the Horizontal Directional Drill Inadvertent Contingency Plan will be followed.

The proposed drill path involves an approximate 0.4-mile long HDD from the launch site in a southwesterly direction where the boring would emerge in a receiving pit in Kingsland Bay. VGLD has secured a license agreement with the Kingsland Bay State Park for use of this area (Appendix II, Attachment a). In the lake, the temporary gravity cell would be used at the exit point to receive the drilling fluid (Figure 5) and accommodate dredging of the transition area between the HDD installed conduit and the jet plow installed cable. In addition, the gravity cell will serve as the point where the reamer and HDPE conduit are attached and pulled back through the borehole (depicted in Appendix I, Attachment d, Marine Route Plan and Profiles, Sheet – HDVC-VT-M-016 - EXIT HDD, Appendix I, Attachment d).

The temporary gravity cell is a four-sided steel box, with the approximate dimensions of 30 feet long, 10 feet wide and 10 feet tall, that will be placed over the HDD exit point. Due to the lakebed sediment conditions, it is expected that the temporary gravity cell will settle into the unconsolidated sediment to form a seal, and allow dredging. Once the gravity cell is placed, the sediment within its interior will be dredged to approximately 4 feet below the lakebed to the borehole exit point; see section 3.1.4 for additional details regarding placement of the dredge material. The gravity cell will hold back the soft sediments and prevent them from collapsing into the hole during HDD reaming and conduit pulling operations.

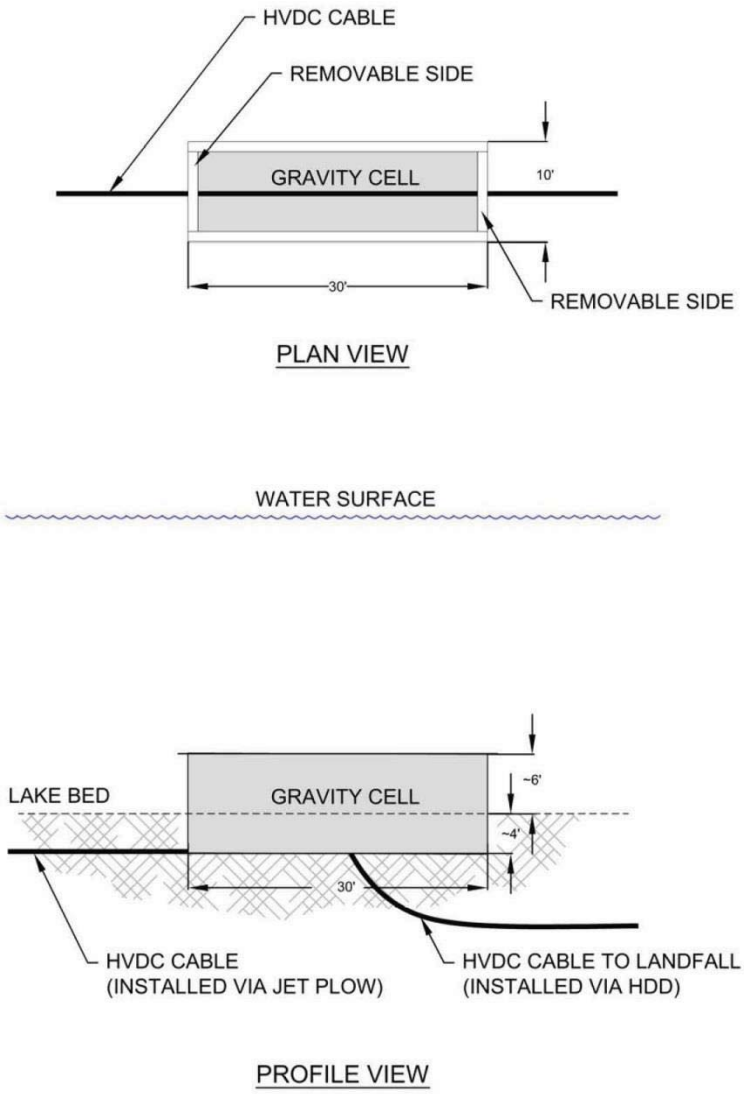

Figure 5. Gravity Cell Detail

After the reaming operation has achieved the proper borehole diameter, the pipe pulling operation can begin. The Project will use a HDPE pipe with an inner diameter of approximately 14 inches for the conduit. The sections of the HDPE conduit will be heat fusion welded into a continuous segment on land. The continuous segment of HDPE conduit equivalent to the borehole length will then be pulled from the land and onto the surface of the lake. HDPE conduit is buoyant in water, and will be floated to the marine support barge at the borehole exit location. Several small support vessels will be used during the pipe floating operation. These vessels control the pipe and help maintain a safety zone around the floating pipe. The marine support barge crew and divers will connect the HDPE conduit to the HDD drill string. The HDD rig will be used to pull the HDPE conduit back through the borehole to the entry location as shown in Figure 6.

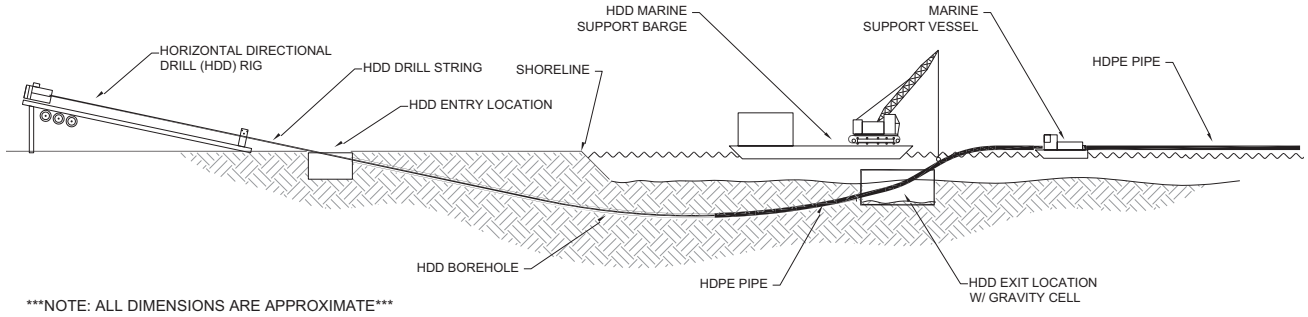

Figure 6: HDD Landfall Pipe Pulling Operation

Once the HDPE conduit is installed back to the entry location, the conduit will be capped and the gravity cell removed. The conduit will be left in-place until the Underwater Cable installation process can begin. The cable installation process will be scheduled around "time-of-year" restrictions at Kingsland Bay State Park, required "schedule float" time between the HDD and cable installation operations, and the onset of winter ice on the lake.

A marine support barge will be required during certain phases of the landfall HDD operation. The marine support barge will have the necessary equipment such as, dive team support equipment, mooring systems, crane, frac-tanks, subsea pumping equipment, and related safety equipment, all necessary for offshore HDD operations. The barge will provide support during the gravity cell installation and dredging, borehole reaming, pipe pulling operations, and gravity cell removal. The marine support barge will be moored using anchor and winch line spread for the entire duration of the HDD operations. The barge will also be used as the diving operations platform when divers are assisting with the HDD.

Each high voltage cable will require its own HDPE conduit, due to thermal requirements. Therefore, the process described above will be performed twice at the HDD landfall for the HVDC Cable System. Please refer to the attached HDD Inadvertent Return Contingency Plan for further details (Appendix III, Attachment a).

1.4 OPERATIONAL DESCRIPTION

The HVDC cables are designed to have a long lifespan, requiring no regular maintenance or replacement, and be installed to withstand the wide range of conditions that could be encountered

during the life of the Project. The integrity of the equipment will be reviewed during regular monitoring and inspections preformed during scheduled outages. The Project has an expected lifespan of 40 years, with a predicted annual energy availability of 98 percent per year.

In regards to the Project facilities, with the exception of system monitoring, the facilities are capable of being largely unmanned once in operation, utilizing automated controls and remote operations managed by VGLD. If any field support of system operations becomes necessary, VGLD will engage a contracted specialty transmission services provider.

1.4.1 Cable System Reliability and Maintenance

The HVDC and HVAC Cable systems are expected to be highly reliable and virtually maintenance free. In the shallow water areas of the Underwater Cable Route, burial provides additional mechanical protection. As required by Vermont Dig Safe Law (Vermont Statutes Title 30 Chapter 86 and Public Service Board Rule 3.800, Underground Utility Damage Prevention System), the Applicant will notify Dig Safe when excavation or other work may occur within the vicinity of the cable systems. Additionally, future navigational charts of the lake will show the cable route.

In the unlikely event of a cable fault, typical utility fault locating methods will be used. For Underwater Cable faults, the process will utilize the same marine equipment and follow similar procedures as those used during installation. The fault location will be identified using divers, which would then cut the cable at that location. The cable would be recovered to the barge, where the faulted section would be cut from the cable and jointed with a new section of cable. The remaining segment of un-faulted cable, still on the lakebed, would then be recovered and jointed to the new section of cable. The new section of cable along with the joints would then be laid back onto the lakebed in waters greater than 150 feet deep. In waters less than 150 feet deep the new section would be buried, most likely by hand jetting.

A Cable Repair Plan will be prepared before Project operation commences to identify procedures and people required for performing maintenance and emergency repairs. This plan will outline the steps, notifications, methods, resources and equipment involved in system repair and maintenance. The Cable Repair Plan will be prepared after the EPC contractor has been selected by VGLD and after the permitting process has been completed, when the system specifics can be finalized.

1.5 PROJECT SCHEDULE

VGLD anticipates the following Project schedule:

Table 1
Anticipated Project Schedule

Project Phase	Step	Estimated Timeline
Pre-Construction	Engineering and Design	Feb. 2018 – Sept. 2020
	Converter Equipment Procurement, Manufacturing, and Delivery	April 2018 – Sept. 2020
	Submarine Cable Procurement, Manufacturing, and Delivery	May 2018 – Aug. 2020
	NY and VT Converter Site Works	May 2019 – April 2021
	Land Cable Procurement, Manufacturing, and Delivery	Jan. 2019 – July 2020

Table 1 Anticipated Project Schedule		
Project Phase	**Step**	**Estimated Timeline**
Construction	NY Landfall HDD including Gravity Cell	May 2019 – Sept. 2019
	VT Landfall HDD including Gravity Cell	Sept. 2019 – Dec. 2019
	Installation Barge Mobilization, Sea Trials, Route Clearance (grapnel run)	May 2020 – July 2020
	Submarine Cable Installation (including NY & VT Landfalls)	Aug. 2020 – Sept. 2020
	Installation Barge De-Mobilization	Sept. 2020 – Oct. 2020
	NY Land Cable Installation (conduits & cable)	May 2019 – Oct. 2020
	VT Land Cable Installation (conduits & cable)	May 2019 – Sept. 2021
	HVDC Link Subsystem Tests and Commissioning	April 2021 – Nov. 2021
Commercial Operation	Operation Start	Dec. 2021

2.0 PUBLIC BENEFITS

This section demonstrates that the Project would serve a public purpose and will provide benefits that outweigh any potential adverse impacts. The Project will provide lake-specific and other public benefits as outlined below.

2.1 INFRASTRUCTURE BENEFITS

In accordance with the Vermont 248 Petition Prefiled Testimony of John Miller, the Vermont Green Line project will provide a new controllable tie line between upstate New York and Vermont that will give the New England states additional transmission capacity to access green energy from wind and hydro resources in and around the upstate New York. The Project will operate in parallel with existing AC tie lines between New York and New England and its transmission capacity will complement the functionality and capacity of the AC tie lines. The presence of the Project will also promote the development of new resources in northern New York which will be available to improve the load serving reliability of Vermont.

Additional infrastructure-related benefits as a result of the Project include:

- Complete restoration of roadway (in locations where the cable is proposed to be installed in the roadway) in compliance with all local and state permit requirements.
- $425,000 in annual payments to VTrans for use of a 1.3 mile stretch of limited access facilities along Route 7 during the 40-year life of the Project. Payments to VTrans will escalate by 3% per year beginning in the eleventh year of the Project.

2.2 ECONOMIC BENEFITS

The Project provides substantial direct and indirect economic benefits to Vermont and its residents, such as jobs and associated economic activity during construction, state and local tax revenues, permit fees, and long-term lease payments for use of state highway rights of way, among others. Consistent with the Vermont 248 Petition Prefiled Testimony of Joseph Rossignoli, VGLD proposes to include a

number of direct financial benefits to the State of Vermont and communities impacted by the Project, including, but not limited to the following:

- Approximately $80M in state Education Fund tax revenue over the Project's 40-year life.
- A one-time payment of $500,000 to the Agency of Natural Resources to fund improvements to Kingsland Bay State Park.
- Funds directed to VTrans, as described in Section 2.1.
- An estimated $39M in property taxes to Vermont municipalities over the 40-year life of the Project.
- Approximately $44M in supplemental payments to the Town of New Haven over 40 years, in recognition of its role as host to the Vermont Converter Station.
- A one-time payment of $3M to the Town of New Haven Volunteer Fire Department and Highway Department for a new fire station and new town garage.
- Lower Locational Marginal Energy Prices for Vermont totaling $41M over 40 years on an NPV basis.
- Lower Locational Marginal Energy Prices for Vermont utilities over 40 years.
- Citizens Energy's contractual commitment to use 50 percent of its profits to assist low income Vermont ratepayers.

VGLD expects to provide additional benefits to the State of Vermont to recognize the Project's use of, and installation in, Lake Champlain. In addition, per the Prefiled Testimony of Alfred Morrisey, Jr., an economic analysis showed that the investment in the Project in Vermont over the three-year construction spending period will result, directly and indirectly, in the creation at its peak of 764 Vermont jobs. Approximately $162.4 million will be added to Vermont's gross domestic product over the three-year construction period, along with $89.4 million in personal income and $9.5 million in state tax revenues. Spending on operations and maintenance following construction will result in 183 jobs in Vermont, with a corresponding addition of $15.5 million in gross domestic product, $13.9 million in personal income, and $1.5 million in state tax revenue.

2.3 LAKE-SPECIFIC AND OTHER ENVIRONMENTAL BENEFITS

The following include environmental and infrastructure related benefits as a result of the Project:

- Because the Project is intended to transport electricity generated from non-CO_2 emitting facilities, it has the potential to help reduce the amount of greenhouse gas emissions in the region.
- A one-time payment of $500,000 to the Agency of Natural Resources to fund improvements to Kingsland Bay State Park, as noted in Section 2.2.
- Transmission of 400 MW of renewable energy to New England.
- Implementation of additional benefits may be negotiated as a result of the Vermont Section 248 CPG process.

3.0 PUBLIC TRUST DETERMINATION

The VT DEC's test for determining whether a particular encroachment should be permitted involves an examination of how the proposed project will affect the public good. As all encroachments affect the waters where they are located, the question is whether the effect is adverse or not. 29 V.S.A. section 405(b) lists criteria that the Department must consider in making the public good determination. Since the determination of the potential effect of an encroachment on these criteria requires a certain degree of subjective judgment, the Department has developed the following three-part test as guidance in determining whether there is an adverse effect on the public good. As presented in this Narrative, application of the three-part Public Trust Doctrine Procedure demonstrates that the Project conforms to the Public Trust Doctrine, as described below:

3.1 PUBLIC TRUST DETERMINATION PART 1: EXTENT OF ENCROACHMENT

The following sections describe the Project's purpose, analysis of alternatives, minimization of construction-level impacts, and the placement of fill. Together, these considerations detail how the Project was developed in accordance with Part I of the Public Trust Doctrine, which examines the extent of encroachment.

3.1.1 Project Purpose

New England is at an energy crossroads. Electricity customers in New England pay among the highest electricity prices in the continental U.S. and demand for affordable clean electricity is exceeding the current supply. Electric utilities in most New England states are required to procure renewable energy as part of their power supply portfolio and those goals can be met cost-effectively through new transmission lines carrying wind and hydro-energy. The combination of constraints on natural gas and retiring fossil fuel plants requires immediate, cost-effective transmission solutions that will benefit us now and in the future.

The Project is designed to deliver 400 MW of renewable energy to New England's transmission grid. By transmitting renewable energy to New England, the Project will provide important benefits to the region. With over 4,200 MW of the region's generating capacity recently retired or soon-to-be retired and an additional 6,000 MW 'at risk' of closing, Vermont Green Line-delivered power will provide a clean, cost-effective, visually unobtrusive source of new capacity to the region. By diversifying the region's energy supply, the Project will contribute to the long-term stability of energy markets and security of supply.

3.1.2 Alternatives Analysis

The VELCO New Haven, Vermont Substation and NYPA Plattsburgh, New York Substation are the closest points between Vermont and New York high voltage systems and thus allow for the transmission of renewable energy to the ISO-NE electricity market, while doing so at the lowest possible cost to ratepayers. A careful approach has been taken to evaluate alternative routes between the New Haven Substation and the Vermont-New York border in Lake Champlain, and the decision to locate the HVDC Land Route within existing road ROWs will minimize impacts to wetlands, farmland, visual resources, land use, and other resources.

During the preliminary design and route selection phases of Project development, VGLD's goal was to avoid and minimize impacts to protect environmental, cultural, and other sensitive resources to the greatest extent practicable, while ensuring constructability, economic, and other project feasibility

criteria. The alternatives analysis provided in Appendix IV, Attachment a, includes an evaluation of alternative technologies, alternative interconnection substation locations, alternative converter station locations, and alternative transmission line land and underwater routes. The evaluation describes the comparative merits and detriments of each alternative and explains why the Project is the preferred alternative.

During in-water surveys a number of route alternatives were evaluated and dismissed because conditions were unsuitable for installation. VGLD focused on developing a route that optimized the Project's use of Lake Champlain, mindful of the potential impacts to the public and natural communities identified, as well as the high cost associated with crossing directly from New York to Vermont straight across Lake Champlain and following a predominantly land-based route. The proposed route of the Project minimizes impacts on the environment, achieves the purpose and need of the Project, and minimizes cost.

3.1.3 Best Management Practices (BMPs)

In order to minimize temporary construction-related impacts, the Project will use construction methodologies that reduce impacts to protected environmental, cultural and other sensitive resources. Furthermore, the implementation of stormwater and erosion control Best Management Practices (BMPs) defined through a Stormwater Pollution Prevention Plan (SWPPP) will minimize impacts to groundwater and nearby waterbodies to the maximum extent practicable. Temporary construction impacts will be mitigated by such measures as time-of-year restrictions, traffic management, and implementation of HDDs at the shore of Lake Champlain and under sensitive stream, wetland, and infrastructure crossings, and jet plow and direct lay construction methodologies in Lake Champlain will further minimize temporary impacts. Construction will be closely monitored and an HDD Inadvertent Return Contingency Plan (Appendix III, Attachment a) will be in place, in addition to the Aquatic Invasive Species Management Plan (Appendix III, Attachment c). There will be a "Notice to Mariners" identifying and a safety zone around the marine work area due to the divers and near surface anchor lines around the marine support barge.

Additional mitigation measures may be developed in consultation with resource agencies as well as regulatory and public stakeholder groups if further mitigation of temporary construction impacts is warranted.

3.1.4 Placement/Removal of Fill

The Underwater Cable Route crosses two proposed cable projects in Lake Champlain, New England Clean Power Link (Electric Utility HVDC) and Champlain Hudson Power Express (Electric Utility HVDC), and three currently installed cable systems: NYPA/VELCO PV20 (Electric Utility 115 kV), Vermont Telephone Company (Communications Cable), AT&T (Communications Cable). Crossings will be made as close to perpendicular as possible to minimize the amount of overlap. Vertical separation between the Project and the other utility systems will be established during installation using articulated concrete mattresses, grout bags, rock placement, or some combination in accordance with site conditions (e.g., water depth, type of utility being crossed, soil conditions, etc.), permit requirements, and crossing agreements between VGLD and utility owners. Based on the number of utility crossings, VGLD has estimated that 257.4 cubic yards of concrete will be used in the form of concrete mattresses. The mattresses are manufactured on land and will be brought to the project and lowered into the water from a barge (Appendix I, Attachment e depicts a typical articulated concrete mattress).

As part of the HDD installation, sediment will be removed from within the gravity cell in order to accommodate the cable transition from HDD to jet plow installation methods. Therefore, after the cable has been installed, the area inside the gravity cell will need to be restored by replacing the approximately 133.3 cubic yards of sediment that was removed as part of construction. Dredge material will be removed utilizing a hydraulic excavator. The dredged material will be placed on a barge and remain there for 60 to 90 days, until the HDD is complete. The material used to restore the excavated lakebed will consist of native backfill, if suitable. If the dredge material is not suitable for re-use, material acceptable by the permitting agencies will be used, and the unsuitable dredge material will be appropriately disposed of on land. All of the dredge work described above will use supplemental barge(s) in addition to the marine support barge required for the HDD. As with any significant Project changes, if any of these described equipment or methods change once VGLD hires the EPC contractor, VGLD will notify the VT DEC.

3.2 PUBLIC TRUST DETERMINATION PART 2: EFFECT OF STATUTORY CRITERIA

The following sections describe the Project's analysis of water quality, shoreline, fish and wildlife habitat, as well as navigation and public uses in the Project area. These considerations detail how the Project was developed in accordance with Part II of the Public Trust Doctrine, which examines the effect of the Project on these public trust resources. Additionally, this assessment includes sections describing the Project's adherence to applicable municipal shoreland zoning ordinances, as well as town and state plans. Based on the following analysis, the Project is not anticipated to result in any adverse impacts related to this statutory criteria.

3.2.1 Water Quality

VGLD conducted field studies which included sediment cores for the purpose of sediment chemistry characterization and grain size analysis. Sediment core samples were collected using a pneumatic vibratory corer at locations spaced approximately one half-mile apart, and in areas where the transmission cable is proposed to be installed via jet plow (i.e., areas shallower than 150 feet deep). The collected sediment samples were analyzed per VT Department of Environmental Conservation (VT DEC) and New York State Department of Environmental Conservation (NYSDEC) requirements.

Since construction activities along aquatic portions of the Project route could result, on a temporary basis, in the disturbance and resuspension of sediments, and in order to assess potential impacts, VGLD undertook sediment sampling and sediment dispersion and deposition modeling (Sediment & Benthic Assessment Report, (Appendix IV, Attachment b) and Sediment Dispersion and Deposition Modeling Study (Appendix IV, Attachment c).

The model shows that low suspended sediment concentrations (25 milligrams per Liter [mg/L]) are predicted to be limited to a distance of 304 feet (93 meters) from the jet plow. The suspended sediment plume is expected to travel farthest from the submarine cable route along the deepest portion of the submarine cable route where slightly higher current velocities and finer particles provide for more lateral movement of the sediments prior to deposition.

High suspended sediment concentrations (100 mg/L) will temporarily remain within 57 feet (17 meters) of the submarine cable. Higher suspended sediment concentrations occur in shallower waters as compared to deeper waters because sediment has less vertical space to spread out in shallow water areas. In addition to the extent of the suspended sediment plume being limited, the duration of the

suspended sediment plume is limited as well. Model results indicate that suspended sediment concentrations will return to ambient conditions within 24 hours after the completion of jet plowing activities in Kingsland Bay where sediments are coarser and within 48 hours in the deep water portion of Thompson Point where sediments are finer. The net result is that suspended sediment is not transported very far from the submarine cable route.

VGLD has developed a Water Quality Monitoring Plan (Appendix III, Attachment b) that the Petitioner will implement to mitigate potential water quality impacts. During the construction phase, VGLD will conduct water quality monitoring in portions of Lake Champlain when it installs the cable by jet plow. Based on State of Vermont Water Quality Standards, previous Project-specific surveys and studies, parameters monitored will consist of:

- field monitoring for turbidity (Nephelometric Turbidity Unit [NTU]);
- collection of water samples for analysis of total suspended solids (TSS);
- collection of water samples for analysis of phosphorus; and
- collection of water samples for analysis of metals.

The implementation of the Water Quality Monitoring Plan will ensure that there will be no undue adverse impact on the water quality in Lake Champlain. Additionally, after the EPC contractor has been selected by VGLD, a Spill Prevention, Control, and Countermeasure Plan (SPCC Plan) will be prepared, which will include provisions to ensure all response actions will be taken to uphold the protection of navigable waters including Lake Champlain.

Thermal Analysis and Impacts

The heat transfer and fluid dynamics of the Underwater Cable System environment were simulated with a model developed using the multi-physics simulation software package STAR-CCM+, Version 9 (Water Temperature Gradients around Proposed VGL Submarine Cables analysis, Appendix IV, Attachment f). Using conservative assumptions, this modeling predicted temperature gradients of the water surrounding the cables for three specific configurations:

Jet Plow Configuration: Cables will be installed 4 feet below the lakebed surface using a jet plow. The maximum temperature rise in the immediate Project vicinity, including the water-sediment interface above the cables, is less than 1°F.

Self-Burial Configuration: At locations where the cables are installed on soft sediment/clay sediment, self-burial is expected to occur at a depth of 1 foot below the lakebed surface. This type of lake-bottom is characteristic of portions of the Project route. The maximum water temperature rise in these locations is approximately 1.8°F. The warmed region ($\Delta T > 1°F$) is limited to a thin layer extending less than 0.5 inches above the water-sediment interface.

Surface-Laid Configuration: At locations where cables are laid on bedrock or other surfaces harder than the soft soil/clay sediment common to the bottom of Lake Champlain the cable deposition is described as a Surface-Laid Configuration; the extent to which this will occur is not precisely known at this time. In regions where the surface-laid cables fall on bedrock and self-burial does not occur, the maximum water temperature rise is estimated to reach 36°F due to direct contact between the cables and water. In this scenario, the warmed region ($\Delta T >$ °1 F) is limited to the volume of water that closely surrounds the cable bundle, extending a maximum of 1.4 feet in the horizontal direction and 4.8 inches above the lakebed, which is far less than the

threshold of 200 feet for the mixing zone as required by the Vermont Water Quality Standards. For further detail on the thermal analysis, please refer to Appendix IV, Attachment f.

Additionally VGLD has prepared a post-construction Thermal Monitoring Plan (Appendix III, Attachment d) to measure temperature in the Project vicinity and to ensure the Project will comply with all applicable State water quality standards.

Magnetic Modeling

Electric transmission cables produce magnetic fields, and in order to assess the potential effects of this along the route, VGLD undertook a study. Results of the study are presented in the Magnetic Field Assessment for Proposed VGL Subterranean and Submarine Cables (Appendix IV, Attachment g). The VGLP cables are contained in metallic shielding, which prevents the electric filed from reaching the aquatic environment. An induced electric field, however is produced by the motion of electric charges in a magnetic field. Modeling of the magnetic fields and induced electric fields included three aquatic configurations for the cables: HDD, jet plow and surface laid.

HDD Configuration: In the HDD configuration, the cables are proposed to be buried 15 feet under the lakebed and separated by 30 feet. The magnetic field of the cables was calculated at 1 foot, 10 feet and 19 feet above the lakebed at various distances from the centerline. The largest calculated magnetic field for the HDD configuration is 1,081 mG (less than 0.1% of the International Commission on Non-Ionizing Radiation [ICNIRP] recommended general exposure limit of 4,000,000 mG for static magnetic fields). Due to the separation of the cables, the magnetic field levels diminish relatively slowly compared to the other configurations considered, but approach the ambient geomagnetic field of approximately 535 mG within 40 feet of the centerline. At an estimated water velocity of 4.8 cm/s the induced electric field with the HDD configuration is 5.2 µV/m at one foot above the lakebed and 4.0 µV/m at 10 feet above the lakebed. The induced electric field due to the ambient geomagnetic field at this velocity is 2.5 µV/m.

Jet Plow Configuration: In the jet plow configuration, the cables are proposed to be bundled and buried at a depth of 4 feet below the lake bed. The static magnetic field was calculated at 1 foot, 10 feet and 19 feet above the lakebed at various distances from the centerline. The maximum calculated magnetic field for the jet plow configuration is 661 mG (less than 0.1% of the ICNIRP recommended general exposure limit of 4,000,000 mG for static magnetic fields). In the jet plow configuration, the magnetic field decreases rapidly such that the rise over the ambient geomagnetic field is limited to approximately 10 feet on either side and above the cables. At an estimated water velocity of 4.8 cm/s the induced electric field with the jet plow configuration is 3.1 µV/m at one foot above the lakebed and 2.6 µV/m at 10 feet above the lakebed. The induced electric field due to the ambient geomagnetic field at this velocity is 2.5 µV/m.

Surface-laid Configuration: In the surface-laid configuration, the cables are bundled and laid on the lakebed surface. The maximum magnetic field is the highest of the three considered configurations at 3,764 mG (less than 0.1% of the ICNIRP recommended general exposure limit of 4,000,000 mG for static magnetic fields). Similar to the jet plow configuration, the magnetic field decreases rapidly. At 10 feet above or to either side of the cables the maximum change to the ambient magnetic field of approximately 535 mG due to the cable is just 30 mG. At an estimated water velocity of 4.8 cm/s the induced electric field with the surface-laid configuration is 18 µV/m at one foot above the lakebed

and 2.7 µV/m at 10 feet above the lakebed. The induced electric field due to the ambient geomagnetic field at this velocity is 2.5 µV/m.

3.2.2 Fish and Wildlife Habitat

To avoid disturbance of productive shallow water habitats, fisheries habitats and disturbance of the shoreline, VGLD will utilize HDD technology to install the Underwater Cables from the land out to a water depth of 30 feet, at Station 2450+88, proximate to milepost 46.0. The HDD entry hole location will be in a field, approximately 235 feet away from the shoreline in Kingsland Bay State Park. In addition, the gravity cell placement at the HDD exit location in Kingsland Bay where the jet plow and the HDD transition occurs will minimize dredging volumes and the creation of suspended sediments, providing further protection of the benthic habitat and shallow water.

TRC undertook benthic sampling to characterize the macroinvertebrate community living on and in the sediments along the cable route within Lake Champlain. TRC subcontractors collected thirty (30) samples from benthic habitats within the Lake Champlain portion of the Underwater Cable Route between November 12 and 17, 2015. Benthic sample data was collected from 24 stations along the Project route within Vermont (Benthic Macroinvertebrate Sample Analysis Report, Appendix IV, Attachment d).

The benthic community in the analyzed samples consisted of aquatic insects, mollusks, oligochaete worms, leeches, and nematode worms as well as two aquatic invasive species in the analyzed samples. The most widely distributed taxon observed was the blackworm (*Stylodrilus heringianus*), which was observed in 19 samples, including several samples in which it was the only species present. The most abundant organism observed was the zebra mussel, although it was restricted to six samples. No unique or particularly sensitive benthic species or habitats were identified, and the narrow footprint of cable installation will have only minimal and temporary effects on benthos.

In Lake Champlain, profundal (deep zone) and pelagic (open water) fish assemblages are usually well developed. Lake Champlain offers many different species of fish including brook trout (*Salvelinus fontinalis*), rainbow trout (*Oncorhynchus mykiss*), brown trout (*Salmo trutta*), lake trout (*Salvelinus namaycush*), landlocked salmon (*Salmo salar*), rainbow smelt (*Osmerus mordax*), yellow perch (*Perca flavescens*), walleye (*Sander vitreus*), northern pike (*Esox lucius*), chain pickerel (*Esox niger*), largemouth-bass (*Micropterus salmoides*), smallmouth-bass (*Micropterus dolomieu*), bullhead catfish (*Ameiurus* sp.), bluegill sunfish (*Lepomis macrochirus*), pumpkinseed (*Lepomis gibbosus*), rock bass (*Ambloplites rupestris*) and crappie (*Pomoxis* spp.).

Temporary impacts to benthic habitat and water column turbidity will be short duration and localized to the footprint of the jet plow. The fluidized zone where the cable will be emplaced will be no more than a 2 feet wide and 4 feet deep. Population level effects on fish species will not result from the Project. Fish species that utilize bottom habitats as forage grounds may experience temporary indirect impacts due to the potential loss of prey and may potentially experience direct mortality if they are confined within the gravity cell and cannot avoid construction. Surface-laying the Underwater Cables, and placement of concrete mattresses in locations where the cables cross an existing utility line, will have a negligible impact on fish as mobile juvenile and adult fish are likely to temporarily relocate and avoid harm. Over time, the Underwater Cables will sink into the lakebed, resulting in negligible alteration of the habitat.

Temporary and localized increases in sediment suspension and deposition are anticipated in proximity to the Underwater Cable Route. Temporary elevated suspended sediment concentrations can result in minor impacts to fish species including impairment of respiration, feeding, reduction in dissolved oxygen, inhibition of migratory movements and mortality to early life stages. However, fish have avoidance behaviors that will cause them to move away from the jetting device as the cable is installed, reducing their potential exposure to the small area of suspended sediments around the moving jetting device.

The potential impacts to fish from physical barrier or electromagnetic and thermal emissions during normal operation of the Underwater Cables will not result in an undue adverse impact (Appendix IV, Attachments f and g).

Surveys for mussel species were completed by Biodrawversity, Inc., during July 6, 2016. The results, provided in Appendix IV, Attachment e, Freshwater Mussel Survey in Lake Champlain's Kingsland Bay for a Proposed Cable Route indicated that no rare, threatened, or endangered mussel species were identified along the Project route from the shoreline to depths of 30 feet. Based on these results, the Underwater Cable installation should have no effect on state-listed mussels.

3.2.3 Aquatic and Shoreline Vegetation

Historically there have been numerous species of aquatic vegetation present in Lake Champlain along shoreline areas and in shallow embayments. Native milfoils, pondweeds (*Potamogeton* spp.) *Nymphoides peltatum*, and water celery (*Vallisneria americana*) are commonly found submerged aquatic vegetation species. In recent decades, the two invasive species, water chestnut (*Trapa natans*) and Eurasian watermilfoil (*Myriophyllum spicatum*) have become dominant. Because the project involves HDD installation in water's less than 30 feet deep, areas of submerged aquatic vegetation (SAV) are unlikely to be disturbed by direct cable installation activities.

To prevent the spread of aquatic invasive species such as Eurasian watermilfoil during construction and operation activities associated with the Project, an Aquatic Invasive Species Spread Prevention Plan (Appendix III, Attachment c) has been developed for the Project. In addition, VGLD will develop and implement best management practices and protocols to control the spread of aquatic invasive organisms during construction and maintenance or repair operations following construction.

Vegetation at the shoreline of Kingsland Bay consists of a mixture of shrubs and sparse tree cover, with grasses and other common herbaceous species such as goldenrod (*Solidago* spp); this 40 foot wide strip of woody vegetation is located between the water's edge and Kingsland Bay Road. Soils are shallow, with evidence of bedrock along the shoreline to the left of the shoreline crossing location. On the opposite side of the road is an agricultural field. The Underwater Cable Route will enter and exit Lake Champlain using HDD, a trenchless construction technique that results in cable installation in the ground, well below the shoreline, thereby avoiding disturbance to the shoreline and nearshore habitat. Minor clearing of bushes and scrub vegetation will occur in the HDD workspace, but will not include tree removal; additionally, no clearing will take place within 20 feet of the waterline.

3.2.4 Navigation

The Overall Project will have a minimal to negligible impact on vessel traffic in Lake Champlain during construction and operation. Impacts on navigation along the Underwater Cable Route could stem from additional vessel traffic potentially created by preparation for the Underwater Cable System installation, as well as the installation activity itself. During cable installation, it will be necessary to

restrict all vessel activity in the vicinity of construction vessels, to ensure the safety of vessels operating in the area of active construction and for the safety of the installation crews. Typically, construction will be continuously moving along the cable installation route and will therefore not impact navigation in any specific section of the lake for an extended period. The installation vessel will be required to stop periodically during the cable laying process for splicing activities and for deployment or retrieval of the jet plow. The laying vessel will remain stationary for three to five days during the cable splicing operation and 12 to 14 hours for jet plow retrieval or deployment.

The Underwater Cables will be delivered aboard a purpose-built barge by way of the Hudson River and Champlain Canal. No special conditions or accommodations will be required during delivery of project materials into Lake Champlain.

The Grand Isle Ferry and the Burlington to Port Kent Ferry routes cross the Vermont Underwater Cable Route. The Applicant will coordinate with each ferry operator in advance of commencing construction activities in the vicinity of its ferry route. There is no known industrial or commercial vessel traffic in Lake Champlain. The Applicant will consult with the United States Coast Guard Station Burlington in order to reduce any traffic interference resulting from the Underwater Cable installation. The underwater installation activities would not prohibit any water-dependent recreational or commercial vessel uses of areas outside of the immediate restriction zone around construction vessels.

With regards to Kingsland Bay, vessel access to the HDD exit location will be restricted during HDD operations and related activities (e.g. installing the gravity cell). There is no ferry route in this area of Lake Champlain. The HDD installation activities in the bay are scheduled to occur in the Fall months, outside of the time of highest traffic. The Marine Contractor will file a “Notice to Mariners” with the Coast Guard to ensure boats will temporarily avoid the bay while it is a work area.

Electric transmission cables generate magnetic fields that result in a change to the ambient geomagnetic field that allows compasses to function. Small deviations in compass readings are expected, but would be very small and encountered within about 25 feet of the cable. The deviations from the ambient geomagnetic field will not influence navigation by GPS (Appendix IV, Attachment g).

There will be no significant or measurable operational impacts on vessel use or activity; future navigational charts of the lake will show the cable route.

3.2.5 Recreation and Public Use

The recreation and public use impacts identified are temporary, associated with the Project’s construction. Work area restrictions around the construction barge and HDD equipment will be in place during project construction to ensure the safety of all vessels operating in the area of active construction. In-lake Project construction is currently planned for the Fall season to minimize temporary disruption to the recreational boating in Kingsland Bay that was described in a Section 3.2.4; once construction is complete, there will be no long-term impacts on public access to and use of the lake. In addition, VGLD will make a $500,000 one-time payment to the Agency of Natural Resources to fund improvements to Kingsland Bay State Park as a condition of its license agreement to use Park lands during construction activities. Public access to the HDD entry hole work area will be restricted during construction, but this will only consist of a roughly 1 acre area of the Park.

3.2.6 Consistency with Natural Surroundings

The Project is designed to minimize aesthetic impacts to the communities in which it is located. VGLD will install the cable underwater and underground, and has designed the most visible component of the Project, the converter station, to fit into the agricultural surroundings of the area in which it is located.

3.2.7 Consistency with Applicable Shoreland Zoning Ordinances

As previously stated, VGLD held meetings with towns along the Project's route in order to obtain their input on the overall Project and its route design. In Vermont, preserving lakeshores is dependent upon voluntary landowner participation with the exception of the small number of towns that have shoreland zoning. According to the VT ANR's *Lake Shoreland Protection and Restoration Management Options, In fulfillment of the Requirements of Act 138,* dated January 11, 2013, towns are authorized to set minimum shoreland standards if they choose to. The Underwater Cable Route does not come within 1500 feet of the Vermont shoreline, with the exception of the town of Ferrisburgh, Vermont where the Underwater Cable Route makes landfall. Therefore, VGLD reviewed the town plan and shoreland zoning ordinance for Ferrisburgh to ensure the Project's adherence to applicable standards.

<u>Ferrisburgh Town Plan (2016) and Zoning Bylaws (2010):</u>

Ferrisburgh's Land Use Policy for the Shoreland (SD-2) District includes the lands adjacent to the shores of Lake Champlain, running the entire length of Ferrisburgh's most westerly boundary, and encompassing the lands of the Basin Harbor Club. This area includes forested and open land, businesses related to recreation and tourism, residential homes and seasonal cottages as well. It also includes areas of Button Bay State Park, Kingsland Bay State Park, and the Basin Harbor Club.

Natural resources associated with this planning area have been relatively well protected through the presently designated Shoreline zoning district and associated bylaws. Land use permitted in this district should be compatible with the limitations of the area, should not create any erosion problems, and should not harm any significant resources such as unique vegetation.

Project Response:

- With the exception of Kingsland Bay State Park, the Project is not proposed for any location that is identified as an area for conservation in the Ferrisburgh Town Plan.
- The Project route will be located within approximately 120 feet of the mapped Shoreline District (S2) of Ferrisburgh. However, it will be buried underground in this location, and installed using HDD. Existing vegetation along the shoreline will not be disturbed by this project and surveys within this area did not identify any rare, threatened, or endangered species. A temporary gravity cell will be used at the lake-side exit location of the HDD to help prevent suspended sediment from spreading to other parts of the lake, and to provide a contained work area, thus limiting disturbance. Once the cell is placed, the sediment within its interior will be dredged to approximately 4 feet below the lakebed to the borehole exit point. The gravity cell will hold back the soft sediments and prevent them from collapsing into the hole during HDD reaming and conduit pulling operations. Turbidity curtains will be deployed if needed at the lake entry point. On the landside, typical erosion controls will be installed around the drill site. Open space and public use of the Kingsland Bay State Park will not change as a result of the Project's operation.

- In addition, the Project meets all Vermont State standards set forth within the Shoreland Protection Act (Vermont law, Chapter 49A of Title 10, § 1441 *et seq*.) and 2015 Handbook, which is a recommended action set forth for the Ferrisburgh Land Use Policy. In requiring a Certificate of Public Good under Section 248, the Project meets the Shoreland Protection Act's utility project exemption (Chapter 49A of Title 10, § 1446 (b)(13)). Additionally, the HDD entry and workspace is located on the non-lake side of the municipal Kingsland Bay Road. A revegetation plan for the temporary workspace disturbance will be developed prior to construction, after VGLD hires the EPC contractor.
- In summary, the Project is consistent with applicable policies in the Town Plan and Zoning Ordinances for Ferrisburgh.

3.2.8 Consistency with Applicable State Plans

The State plans that are potentially applicable to the Project are the Lake Champlain Phosphorus Total Maximum Daily Load (TMDL) Plan, and relevant Tactical Basin Plans.

TMDL Plan:

In accordance with the Clean Water Act, each state must develop TMDLs for all waters identified on their Section 303(d) list of impaired waters, according to their priority ranking on that list. A draft TMDL plan for Lake Champlain was issued by the U.S. Environmental Protection Agency (USEPA) in 2002. In June 2016, the USEPA released new phosphorus pollution limits for Lake Champlain by establishing TMDLs for twelve Vermont segments of Lake Champlain. The State of Vermont is seeking public input on the Draft Lake Champlain TMDLs Phase 1 Implementation Plan, which provides the framework for how these phosphorus pollution limits will be met.

Hodge Water Resources (HWR) and TRC have concluded that the increase of total phosphorous concentrations above the Vermont water quality standards represent a *de minimis* temporary increase in total phosphorous for the Otter Creek region of Lake Champlain (Sediment Dispersion and Deposition Modeling Study and Technical Memorandum, Appendix IV, Attachment c). The cable installation represents a one-time resuspension of phosphorus associated with existing lake sediments into the water column on a short term basis, and does not represent a new source of phosphorous contribution to the lake. Cable installation will lead to localized and temporary water quality impacts associated with disturbance of sediments and associated constituents such as phosphorous already present, which do not constitute a new source of phosphorus loading to the lake.

Tactical Basin Plans:

Tactical Basin Plans have been established for the Northern Lake Champlain and Otter Creek Drainage Basins. The intent of developing the Plans is to assist in the management of the state's water resources, as specified in the goals and objectives of the Vermont Surface Water Management Strategy (VT SWMS). The goals and objectives include the protection, maintenance, enhancement, and restoration of the biological, chemical, physical integrity, and public use and enjoyment of Vermont's water resources, as well as to protect public health and safety. As discussed herein, the Project is consistent with the goals and objectives of the VT SWMS.

3.3 PUBLIC TRUST DETERMINATION PART 3: POTENTIAL CUMULATIVE EFFECT

The third part of the Public Trust Determination assesses whether the potential cumulative effect of the encroachment, when considered in conjunction with other existing encroachments, is adverse. The following sections demonstrate that the few potential impacts will have cumulative effects, either spatially or temporally.

Existing Encroachments

The Underwater Cable Route crosses several permitted cable projects in Lake Champlain and several currently installed cable systems.

The Project route parallels the TDI New England Clean Power Link (NECPL) route for approximately 35 miles of its 40.2 mile Underwater Cable Route. The Vermont Green Line and NECPL routes cross three times and vary in separation distance from 50 to 3,200 feet. The Project route crosses a second project proposed by TDI in Lake Champlain (the Champlain Hudson Power Express) once. The Vermont Green Line route crosses the PV20 cable system between Cumberland Head and Grand Hero Island, which is scheduled to be replaced; therefore minor cable disturbances impacts may overlap at this location. They will not be constructed at the same time, so temporal impacts will not overlap. Anticipated utility crossings are depicted in Appendix I, Attachment d, Marine Route Plan and Profiles.

Utility crossings will be made as close to perpendicular as possible to minimize the amount of overlap. As described in Section 2.1.4 vertical separation between the Project and the other utility systems will be established during installation using concrete mattresses, grout bags, rock placement, or some combination in accordance with site conditions (e.g., water depth, type of utility being crossed, soil conditions, etc.), permit requirements, and crossing agreements between VGLD and utility owners

The Project passes approximately 435 feet west of the deep water intake shared by the Ed Weed Fish Culture Station and Grand Isle Consolidated Water District. Although the Consolidated Water District system is able to operate strictly from a different shallow intake for a period of time (pers. comm. W. Steadman with TRC, 2016) the Ed Weed Fish Culture Station requires continuous use of the deep water intake (pers. comm. A. Miller with TRC, 2016). Concerns regarding the resuspension of sediment and transporting sediments from the surface laying cable operations to the deep water intake causing elevated turbidity have been addressed with the Project team.

Based on analysis of the potential for resuspending and transporting sediments from the surface laying cable operations, no impacts to water quality or fish culture operations are anticipated from Project construction and operation, even with consideration of the construction of the NECPL Project. There is no mechanism for surface laying of cable to create a vertical force to eject sediments upward to these heights, therefore it is anticipated that particles released around the cable point of touchdown will settle out of the water column before reaching the intake; refer to Appendix IV, Attachment h for additional detail regarding water quality at the Ed Weed Fish Culture Station Deep Water Intake. Since construction impacts are temporary, and construction of these two projects will not overlap in time, there is no potential for cumulative impacts. In addition, the cable is designed to not require maintenance, therefore no lakebed disturbance is anticipated for the life of the Project.

Given the temporary and localized nature of cable installation activities, cumulative impacts could potentially result only from the construction of another project in close proximity (either temporally or spatially) to the Project such that the impacts from one had not attenuated to background levels

prior to the second project occurring. The maximum potential cumulative impact from temporal proximity would result if both projects were installed simultaneously, or if both were installed in quick succession in close proximity. These possibilities can be avoided by scheduling the construction of both projects in a manner that establishes an appropriate time period between the two installations. VGDL believes that such scheduling can be established and would be in the best interest of all interested parties. Project-related electromagnetic fields are the result of electric current flowing through the cables and therefore will not be present during installation activities.

Cumulative impacts from operations also have been considered. With regard to the Underwater Cable System, only minor electromagnetic fields and thermal impacts are considered to be potential areas of cumulative impact in the event that both the Vermont Green Line and NECPL are installed and operated as discussed in Section 3.2.1.

4.0 SUMMARY AND CONCLUSIONS

VGLD is seeking a Lake Encroachment Permit for the installation, operation, and maintenance of an HVDC electric transmission line that will run from New York and enter Vermont within Lake Champlain near the Town of Grand Isle, and run underwater in Vermont for 35.3 miles to the shore of Kingsland Bay State Park. This Project was reviewed relative to the Public Trust Doctrine, and as demonstrated herein and below, is consistent with the Public Trust Doctrine, summarized as follows:

4.1 PART 1

- The extent of the proposed encroachment is not excessive for its stated purpose. The HVDC cable has been designed along a route that is the shortest possible while balancing design, constructability, impact minimization, and cost considerations.
- There are no feasible alternatives to the proposed encroachment which would be less intrusive. The Project's route was designed after a comprehensive alternatives analysis. The proposed route and construction approach represents the optimal balance of many factors, including the least overall environment impacts.
- Considerable effort was undertaken to reduce the Project's impacts on the public resources within Lake Champlain. Lake construction methodology, BMP's, and routing have been designed to reduce overall impacts to Lake Champlain.
- The encroachment involves minimal placement of fill (the cable itself), and concrete mattresses in small, discrete locations where necessary for protection at crossings of other existing utilities.
- Due to the design and construction results, the cables will not result in obstructions to navigation, reduction in public use of the lake, or changes in recreation and scenic values of the lake.
- The Project will provide numerous direct and indirect public benefits for Vermont, including:
    - Infrastructure benefits including long-term annual payments to VTrans for use of limited access facilities, as well as restoration of roadways used for the HVDC Cable Route, increased access to green energy, and improvement of electrical load reliability for Vermont.

- Economic benefits, including state and local tax revenues, increased jobs and associated economic activity during construction, permit fees, lower Locational Marginal Energy Prices for Vermont utilities, assistance to low income Vermont ratepayers, as well as significant financial benefits to the communities impacted by the Project.
- Environmental Benefits, including increased access to green energy, potential reductions in greenhouse gas emissions, and directed funding towards Kingsland Bay State Park improvements through the Agency of Natural Resources.

4.2 PART 2

- The effects of the proposed encroachment on water quality, fish and wildlife habitat, aquatic and shoreline vegetation, navigation, and other recreational and public uses, including fishing and swimming is negligible. Installation will be rapid in most locations along the route, so impacts will generally be temporary. Surface laying for the majority of the route limits the area of lakebed disturbed, and volume of the water column potentially effected by sediment disturbance.
- The proposed encroachment is consistent with the natural surroundings and applicable municipal shoreland zoning ordinances and state plans.

4.3 PART 3

- No adverse cumulative effects related to the Project's encroachment in Lake Champlain are anticipated based on a review of existing utility encroachments, and the determination that the Project will not result in any navigational hazards.

VGLD puts forth these benefits in response to, and with the goal of outweighing, any potential impacts to the lake caused by the Project's construction and/or operation, or potential contribution to the cumulative effects of existing encroachments as well as proposed similar transmission line projects within Lake Champlain. Further, the Project is not expected to result in adverse cumulative effects of existing encroachments from construction or operation, and therefore meets the criteria of Part 3. The Project will also bring significant public benefits to the State of Vermont. As presented herein, the construction and operation of the Project meets the criteria of Parts 1, 2, and 3 of the Public Trust Determination and therefore should be permitted in accordance with VSA Title 29, Chapter 11 Management of Lakes and Ponds §402.

5.0 REFERENCES

This permit application relied on the Vermont 248 Petition Prefiled Testimony and Exhibits of the following witnesses, submitted to the State of Vermont Public Service Board in Docket 8847 on October 21, 2016.

- Prefiled Testimony of Daniel Herzlinger (TRC)
- Prefiled Testimony of Cynthia Martin (TRC)
- Prefiled Testimony of Rick Young (TRC)
- Prefiled Testimony of Christopher Sabick (Lake Champlain Maritime Museum)
- Prefiled Testimony of William Bailey (Exponent)
- Prefiled Testimony of Matthew Hodge (Hodge Water Resource)
- Prefiled Testimony of Joseph Rossignoli (National Grid)
- Prefiled Testimony of Alfred Morrissey, Jr. (National Grid)
- Prefiled Testimony of John Miller (PSC North America)

Additionally, this narrative referenced the assessments and plans listed in the Appendices table on page ii and attached in the following sections, as well as the following personal communications:

Adam Miller, conference call with TRC, September 23, 2016.

Warren Steadman, conference call with TRC, September 23, 2016.

APPENDIX I

Attachment a

Application Form

VERMONT DEPARTMENT OF ENVIRONMENTAL CONSERVATION
WATERSHED MANAGEMENT DIVISION
LAKES & PONDS PROGRAM

Individual Permit Application

For a Lake Encroachment Permit under

Chapter 11 of Title 29, § 401 *et seq.*

For Lake Encroachment Permitting Use Only
Application Number:

Submission of this application constitutes notice that the person in Section B intends to encroach beyond the mean water level of a lake or pond, and certifies that the project will comply with Chapter 11 of Title 29, § 401 *et seq.* All information required on this form must be provided, and the requisite fees (Section I) must be submitted made payable to the State of Vermont, to be deemed complete.

A. Project Information

1. Physical Address (911 Address): Linear project: Ferrisburgh, Waltham, New Haven (Sand Rd, Little Chicago Rd, Route 7); landfall at Kingsland Bay State Park, Ferrisburgh

2a. Town- County: Ferrisburgh - Addison | 2b. Zip:

3. Span (School Parcel Account Number is required for your application to be deemed complete. It can be obtained from your property tax bill. If you cannot locate your property tax bill, please obtain this information from your Town Clerk) N/A

4. Name of Lake/Pond: Champlain Lake (Otter Creek) - Ferrisburg — Little Otter Creek

5. Have you ever applied for a permit with the Department of Environmental Conservation associated with this parcel? ☑ Yes ☐ No

B. Applicant (Landowner if applicable) Contact Information

1. Name: Vermont Green Line Devco, LLC (VGLD) - Bryan Sanderson & Joseph Rossignoli

2a. Mailing Address: 40 Sylvan Rd

2b. Town: Waltham | 2c. State: MA | 2d. Zip: 02451

3. Phone: 781-907-2152 | 4. Email: joseph.rossignoli@nationalgrid.com

C. Application Preparer Contact Information:

1. Name: Colin Duncan, TRC Environmental Corporation

2a. Mailing Address: TRC Environmental, Wannalancit Mills, 650 Suffolk Street

2b. Town: Lowell | 2c. State: MA | 2d. Zip: 01854

3. Phone: (978) 656-3615 | 4. Email: cduncan@trcsolutions.com

D. Abutting Land Owners

Using the abutter addendum available on dec.vermont.gov, attach a list of land owners who abut the proposed project. Please see Appendix II, Attachment c.

E. Project Description

1. Describe the proposed project including the description of the materials and mechanical equipment which may be used during construction and the anticipated work schedule. Identify whether or not the project includes placement or removal of fill and if so, specify the number of cubic yards of fill or dredged materials to be placed or removed beyond the shoreline at mean water level.

Vermont Green Line Devco, LLC (VGLD), is proposing a 400 megawatt (MW) high voltage direct current (HVDC) electric transmission line project, the Vermont Green Line Project (the Project), to be constructed between the New York Power Authority (NYPA) Plattsburgh Substation in Beekmantown, New York, and the Vermont Electric Power Company (VELCO) New Haven Substation in New Haven, Vermont. The information contained within this application is specific to the portion of the route located within Vermont, which is primarily located on town and state road right-of-ways (ROWs) in the Towns of Ferrisburgh, Waltham, and New Haven, Vermont, as well as within Lake Champlain.

The Project involves the installation, operation, and maintenance of an underwater and underground HVDC transmission line, a new converter station, and a short underground high voltage alternating current (HVAC) transmission line to connect the Project to the ISO New England power grid via the VELCO New Haven Substation. The HVDC transmission line will enter Vermont on the lakebed of Lake Champlain near the Town of Grand Isle, Vermont and will run underwater for approximately 35.3 miles to the shore of Kingsland Bay State Park (Underwater Cable Route). The Underwater Cable Route will be largely laid utilizing surface lay and to a lesser extent jet plow construction methodologies in Lake Champlain. At Kingsland Bay State Park, the line will be installed at the landfall using horizontal directional drilling (HDD) and will continue underground largely beneath or adjacent to public roadways for approximately 13.2 miles from Ferrisburgh to New Haven (HVDC Land Cable Route). In New Haven, the line will connect to a new converter station located on private property southeast of the junction of Route 7 and Route 17. From there, approximately 0.23 mile of underground HVAC cable will be installed to deliver converted power from the converter station to the VELCO New Haven Substation where it will interconnect with the regional grid (HVAC Land Cable Route). The transmission line will consist of two solid dielectric-type cables for electric transmission that do not contain insulating oils or fluids and one fiber optic cable for the purposes of transmitting data to control and monitor the line that are bundled together as they are installed. Within Kingsland Bay, the project includes 3,600 cubic yards of dredge and fill material associated with the HDD exit hole, within a type of cofferdam referred to as a gravity cell. The project also includes the use of permanent articulated concrete mattresses at utility crossings, totaling 6,951 cubic feet. Provided permitting is successfully completed, pre-construction activities are currently planned to commence in 2017, with construction-related activities extending from 2018 through 2021; VGLD anticipates the commercial operation date for the Project December of 2021. Please refer to the attached narrative report for details.

2. Describe the purpose of the proposed project:

By transmitting renewable energy to New England, the Project will provide important benefits to the region. With over 4,200 MW of the region's generating capacity recently retired or soon-to-be retired and an additional 6,000 MW of generation 'at risk' of closing, Vermont Green Line-delivered power will provide a clean, cost-effective source of new capacity to the region. By diversifying the region's energy supply, the Project will contribute to the long-term stability of energy markets and security of supply.

3. Describe what less intrusive feasible alternatives have been considered:

During the preliminary design and route selection phases of Project development, VGLD's goal was to avoid and minimize impacts to protect environmental, cultural, and other sensitive resources to the greatest extent practicable, while ensuring constructability, economic, and other project feasibility criteria. The Alternatives Analysis provided in Appendix IV, Attachment a, includes an evaluation of alternative technologies, alternative interconnection substation locations, alternative converter station locations, and alternative transmission line land and underwater routes. The evaluation describes the comparative merits and detriments of each alternative and explains why the Project is the preferred alternative.

4. Describe the public benefits of the proposed project:

As discussed in the narrative, in addition to conforming to the Public Trust Determination, the Project will provide numerous direct and indirect public benefits for Vermont. A summary of infrastructure, economic and environmental, benefits is listed below.

• Infrastructure Benefits: Additional transmission capacity to access green energy; improvement of electrical load reliability for Vermont; restoration of roadways used along the HVDC Cable Route; annual payments to VTrans for use of limited access facilities.

• Economic Benefits: State Education Fund tax revenue; annual property taxes to Vermont municipalities; supplemental payments to Town of New Haven; payments to the Town of New Haven Volunteer Fire and Highway Departments; lower Locational Marginal Energy Prices for Vermont utilities; citizens Energy's Contractual commitment to use percentage of profits for low income Vermont rate payers; increased jobs and associated economic activity during construction.

• Environmental Benefits: Payment to the Agency of Natural Resources to fund improvements to Kingsland Bay State Park; transmission of 400 MW of renewable energy to New England, potential to replace fossil generation with renewable generation, thereby allowing for a reduction in CO_2 emissions; increases electric supply into Vermont without the environmental impacts of constructing and operating generating facilities within the state.

F. Encroachment Effects (describe how the proposed project will affect the following)

1. What measures are proposed to minimize the project's effects on water quality (e.g., use of a turbidity curtain)?

In order to minimize temporary construction-related impacts, VGL will use construction methodologies aimed at reducing impacts to protected environmental, cultural, and other sensitive resources, such as a substantial length of surface lay installation within Lake Champlain. The implementation of stormwater and erosion control Best Management Practices (BMPs) defined through a Stormwater Pollution Prevention Plan (SWPPP) will minimize impacts to groundwater and nearby waterbodies to the maximum extent practicable. Spill Plan and compliance with Coast Guard requirements for vessel operation will minimize the potential for accidental or unintentional pollution. Temporary construction impacts will be mitigated by such measures as time-of-year restrictions, traffic management, and implementation of horizontal directional drilling (HDD) at the shore of Lake Champlain and under sensitive stream, wetland, and infrastructure crossings. A cofferdam-like gravity cell will be used at the HDD exit location within the lake in order to minimize suspended sediments from spreading to other parts of the lake and to limit disturbance within a contained work area. During jet plow construction activities water quality monitoring with appropriate state water quality criteria based action levels will be employed. As directed in the Water Quality Monitoring Plan (Appendix III, Attachment b), if necessary, construction based BMPs may be employed. On land, typical erosion controls will be installed around the HDD drill site. Additional mitigation measures may be developed in consultation with resource agencies as well as regulatory and public stakeholder groups, where further mitigation of temporary construction impacts is warranted. Please refer to attached narrative for further details.

2. How will the project minimize effects to fish and wildlife habitat (e.g., project is not to commence until after fish spawning July 1 of any calendar year)?

As a precautionary measure to protect spring spawning, VGLD will adhere to a July 1 hold date for activity occurring at or below mean water level (95.5 feet NGVD). If USFWS requests a Fall restriction date, VGLD will adhere to this restriction, as well as additional key restrictions that may be incorporated into permit conditions for the project. Please see attached narrative for further detail.

3. Does the project propose removal of aquatic or shoreline vegetation? If so, what measures are proposed to reduce the effects of vegetation removal?

There will be no removal of aquatic or shoreline vegetation; HDD will be used to install the cable under the Lake Champlain shoreline and into Kingsland Bay beyond any locations of aquatic vegetation. In Vermont, the boring will emerge on land in a receiving pit in Kingsland Bay State Park, approximately 235 feet from the shoreline.

4. Describe the surrounding shoreline. Is the project consistent with these surroundings? What measures are proposed to ensure the project is in-keeping with the surroundings?

The shoreline of Kingsland Bay at the location where the HDD will pass from land to under the lakebed, there is about a 40 foot wide strip of woody vegetation between the water's edge and Kingsland Bay Road. Soils are shallow, with evidence of bedrock along the shoreline to the left of the shoreline crossing location. On the opposite side of the road is an agricultural field. The Underwater Cable Route will enter and exit Lake Champlain using HDD, a trenchless construction technique that results in cable installation in the ground, well below the shoreline, thereby avoiding disturbance to the shoreline and nearshore habitat. HDD is a method of installing underground utilities in a shallow arc along a prescribed path by using a drilling rig and drilling techniques well established in the utility industry. The cables will not be visible and will therefore not deter from the natural shoreline surroundings. Please see attached narrative for more detail.

5. Will the project affect navigation, recreation, and other public uses? If so, how will these effects be minimized?

To minimize lakebed disturbance to the greatest extent possible, from the Vermont/New York border to west of Thompson Point, the HVDC Cable will be surface-laid on the lakebed and allowed to self bury. At a water depth of approximately 388 feet, VGLD will transition to using state-of-the-art jet plow installation technology and bury the cable in 4 feet of sediment, to a location where water depths diminish to 30 feet. The use of jet plow embedment methods utilizes simultaneous lay and bury installation ensuring placement of the cable bundle at the target burial depth. Jet plowing underwater cable systems, are considered to be the most effective and least environmentally damaging method of cable installation when compared to traditional mechanical dredging, cable lay, and backfilling operations. Jet plow embedment minimizes disturbance to the lakebed, provides for rapid cable installation, and achieves cable burial that minimizes navigational and recreational impacts. To avoid impacts to public uses in Kingsland Bay, disturbance of productive shallow water habitats, and disturbance of the shoreline, VGLD proposes to use HDD to install the HVDC Cable from water depths of approximately 30 feet under the lake shoreline, to an on land location approximately 235 feet from the shoreline. The HDD exit location in Kingsland Bay will be underwater and occur within a temporary gravity cell to minimize the extent of dredging and associated water quality impacts during excavation. There will be temporary vessel operation restrictions required around the HDD exit hole, and during cable installation by jet plow and surface lay, to protect the safety of the boating public. Please refer to the attached narrative and appendices for further details.

G. Applicant Certification

As APPLICANT, I hereby certify that the statements presented on this application are true and accurate and recognize that by signing this application, I agree to complete all aspects of the project as authorized. I understand that failure to comply with the foregoing may result in violation of the Chapter 11 of Title 29, § 401 *et seq.*, and the Vermont Agency of Natural Resources may bring an enforcement action for violations of the Act pursuant to 10 V.S.A. chapter 201.

Applicant (landowner if applicable) Signature: _____ Date: Dec 19, 2016

I. Applicant Preparer Certification (if applicable)

As APPLICATION PREPARER, I hereby certify under penalty of law that this document and all attachments were prepared under my direction or supervision in accordance with a system designed to assure that qualified personnel properly gathered and evaluated the information submitted. Based on my inquiry of the person or persons who manage the system, or those persons directly responsible for gathering the information, the information submitted is, to the best of my knowledge and belief, true, accurate, and complete. I am aware that there are significant penalties for submitting false information, including the possibility of fine and imprisonment for knowing violations.

Application Preparer Signature: _____ Date: Dec 19, 2016

J. Additional Required Documentation: (please check to ensure you have completed the following)

- [x] All sections of the application are complete or otherwise indicate "not applicable";
- [x] Application includes site plans with aerial and cross section views; Please see Appendix I, Attachments b-e
- NA [ ] Application description includes dimensions and surface areas of cleared areas and impervious surfaces; and
- [x] Application includes photos of project area. Please see Appendix I, Attachment f.

K. Permit Application Fees		
Select the most applicable permit description and requisite fee. If the proposed project involves more than one of the project types, multiple fees may apply. For example, a project involving structural erosion control and marina improvement will require both fees (2) and (3).		
1. Non-structural erosion control project (e.g., rip rap):		
Non-structural erosion control project: $155.00		
Total:		
2. Structural erosion control project		
Structural erosion control project: $250.00		
Total:		
3. Other Projects (e.g., marina improvements):		
Other Project: $300.00		$ 300.00
Project Cost Fee: 0.01 times project cost	Total Project Cost: $ 20,000,000.00 x 0.01	$ 20,000.00
Total:	*Maximum fee amount	$ 20,300.00

Submit this form and application fee, payable to:
State of Vermont
Vermont Department of Environmental Conservation
Watershed Management Division
1 National Life Dr, Main 2
Montpelier, VT 05620-3522

Direct all correspondence or questions to Lake Encroachment Permitting at:
ANR.WSMDShoreland@vermont.gov

For additional information visit: http://dec.vermont.gov/watershed/lakes-ponds.