VERMONT GREEN LINE

A Green Line Infrastructure Alliance Project to Provide Low-Carbon and Renewable Energy for Vermont and New England

Presentation for VTrans, July 24, 2015

Agenda

- Introduction to Anbaric, National Grid, and the Project Team
- Need for the Vermont Green Line Project (VGL)
- Introduction to VGL
  - Scope of Project
  - Overview of the Route
  - Review of Terrestrial Construction Methodologies
- Permitting Overview
- Project Schedules
- Next Steps

Green Line Infrastructure Alliance

- Joint effort of Anbaric and National Grid to transform New England's energy landscape with new large-scale, HVDC transmission projects that will deliver two complementary sources of clean, abundant, affordable energy: **onshore wind** and **hydropower**.

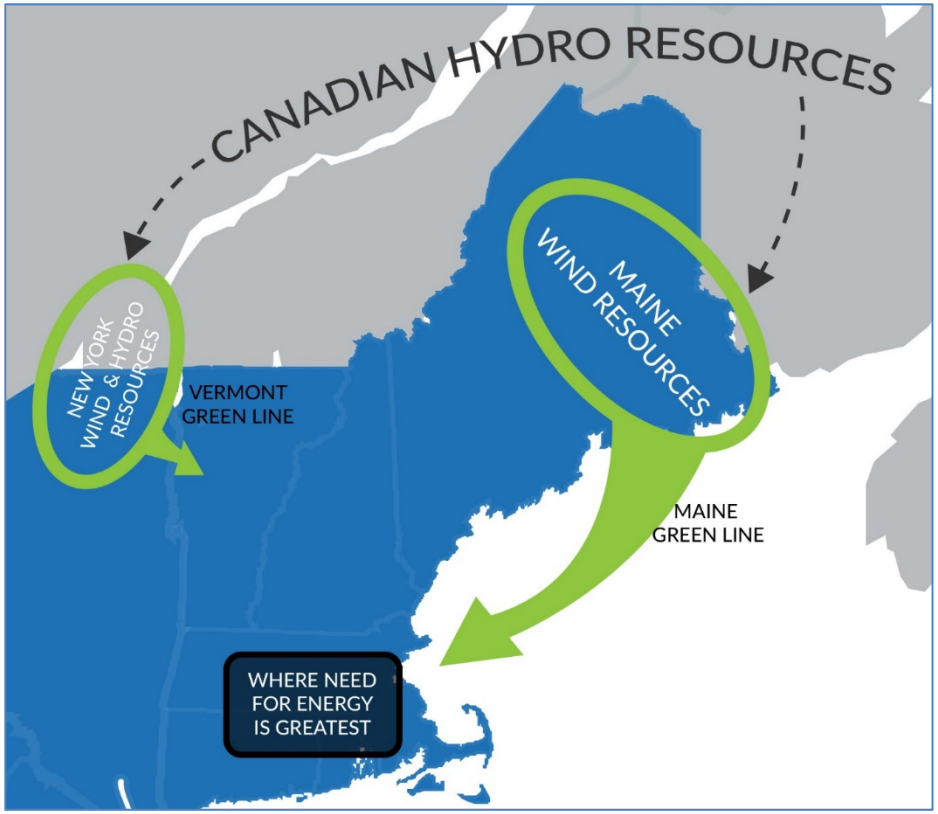

Introduction to Anbaric

Experienced Independent Developer of Transmission Projects

Operating Projects (developed in collaboration with PowerBridge)

- **Neptune Transmission Project**:
  - 660MW independent HVDC transmission system linking New Jersey and Long Island Operational
  - Project is completely underwater (50 mi) and underground (15 mi)
  - Completed July 2007 **on time and on budget**.
  - Received Section 404/10 Permits and EA/FONSI. (www.neptunerts.com)
- **Hudson Transmission Project**:
  - 660MW from New Jersey to West 49th St in Manhattan.
  - Project is completely underwater (4 mi) and underground (3 mi).
  - Completed in June 2013 **on time and on budget**.
  - Received Section 404/10 Permits and EA/FONSI**.** (www.hudsonproject.com)

National Grid

- **National Grid is an international electric and gas distribution and transmission company that serves 1.7 million customers in Massachusetts and Rhode Island**

- **A World Leading Transmission Development Utility**

  - **Representative Portfolio of Experience**
    - **2000 MW HVDC Interconnector**:
      - Construction of the U.S. portion of a 2,000 MW HVDC interconnector between New England and Canada that operates at 450 kV and is jointly owned by some 40 energy companies; National Grid operates the line and owns a majority share.
    - **BritNed**:
      - A 156-mile, bi-pole HVDC electricity interconnector with 1,000 MW capacities each way that connects the UK to the Netherlands.
    - **Interconnexion France**:
      - Angleterre, a 2,000 MW, 42-mile HVDC electricity interconnector between England and France that includes 27 miles of undersea cable. Commissioned in 1986 as part of a joint agreement between National Grid and France's Transmission Service Operator, RTE.
    - **The Western HVDC Link**:
      - Joint project between National Grid and Scottish Power Transmission to develop a proposed subsea HVDC cable on the western side of the UK to provide additional capacity on Great Britain's transmission system, and support continued growth and expansion of renewable energy in the UK.

Project Team

- Vermont Green Line Devco, LLC (partnership entity of Anbaric and National Grid)
- TRC (permitting consultant)
- PSC (engineering consultant)
- ABB (cable vendor, lead designer)
- Cianbro (terrestrial construction contractor)
- Caldwell Marine (lake construction contractor)

Vermont Green Line Overview

- The Vermont Green Line (VGL) is a 400MW controllable HVDC transmission line connecting upstate New York with Northern Vermont
- Anbaric's primary purpose in developing the project is to provide a path for renewables from NY/Canada to Vermont and the rest of New England.
  - New England Governors have made new infrastructure projects for clean energy a priority
  - VGL will respond to a forthcoming competitive RFP
- VGL interconnections points are Plattsburg, NY and New Haven, VT; several <u>underground and underwater</u> routes are under consideration
- VGL enables:
  - A New England buyer to buy energy, capacity and RECs from New York, where those products are cheaper
  - New York suppliers to sell the same products into New England, where those products are at a premium
  - New wind and accompanying economic development in northern New York
  - Diversification of New England's energy supply mix

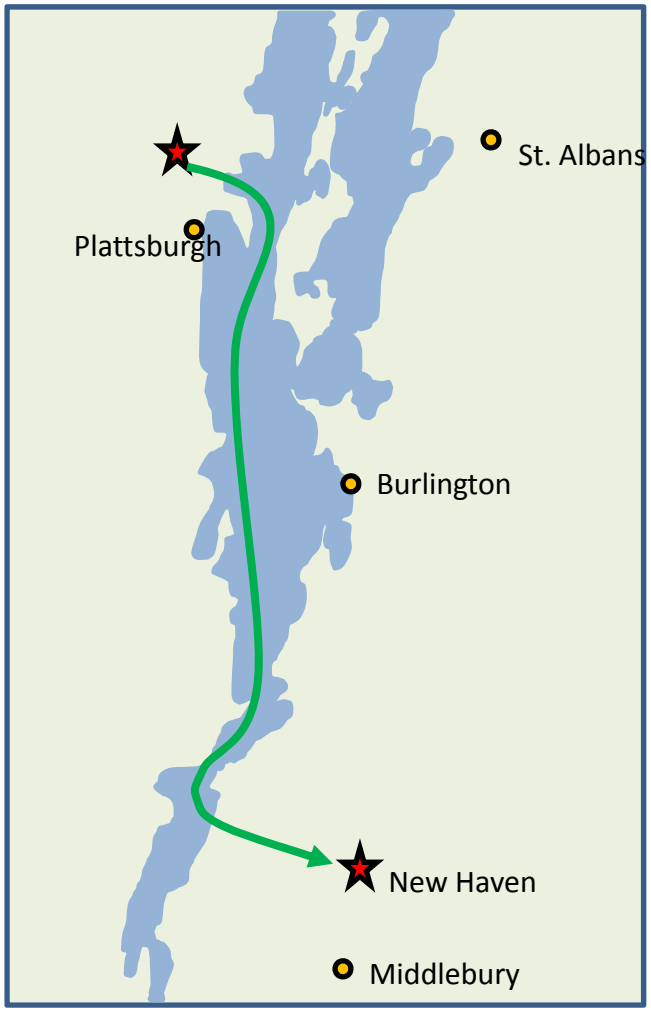

Building for the Future
A 400 MW Project with an 800 MW Cable

- **The most difficult and costly component of an underground transmission project is the installation of the cable**
  - Converter stations have a relatively limited footprint, and can be designed to accommodate future growth
  - Once a cable is in the ground, there is no way to increase its capacity other than by replacing it
- **VGL HVDC cable installed with future capacity in mind**
  - Modest cost increase now for future expansion capability
  - Would only expand if/when the market demonstrates the need
  - Can support Burlington's growth without adding generation in VT

Neptune RTS cable installation and converter stations at Duffy Avenue on Long Island, and Sayreville, NJ. Duffy Avenue was designed to fit in with local character.

VGL's Extensive Outreach

- VT Government: Governor's office, DPS, ANR, Dept of Parks, VTrans, State Reps, State Senators, US Senators' offices, New Haven officials, Ferrisburgh officials
- VT NGOs: CLF, VNRC, VPIRG, REV, VT School of Law, Addison County Chamber of Commerce, Addison County EDC, Addison County Regional Planning Commission
- VT Energy Sector: VELCO, GMP, VPPSA, VEC, BED, Stowe Electric
- NY Government: DPS, State Reps, State Senator, US Rep's office, Beekmantown officials, Clinton County officials
- NY NGOs: North Country Chamber of Commerce, Regional Economic Development Council
- NY Energy: IPPNY, wind developers, hydro owners

Benefits to Vermont

(specific programs and amounts are to be determined)

- Savings for VT Ratepayers, Tax Revenue for Towns, Clean Energy
  - Lowers cost of energy
  - Provides access to renewable energy and lowers cost of RECs
  - Taxes payments, lease payments, employment
- Potential Targeted Public Benefits
  - Clean Energy Development Fund
  - Lake Champlain Fund
  - Payments to or programs for host communities
- Vermont Green Line is committed to being a good neighbor, and is open to ideas on how to best contribute to the communities we affect

VGL Route Review

- Siting Criteria:
  - Identify substations with robust grid connections
  - Locate converter stations as close to interconnection points as possible
  - Minimize overall cable length and disturbance to environmental resources by utilizing previously disturbed lands (roadways) and direct in-water route
  - Avoid/minimize impacts to sensitive habitat areas and known historic resources
- New York
  - Terrestrial mileage: ~6 miles
  - In water mileage: ~3 miles
  - Landfall locations are being negotiated now
  - Converter Station located in Beekmantown, NY
- Vermont
  - Terrestrial mileage: ~13 miles
  - In water mileage: ~37 miles
  - Landfall in Ferrisburgh, VT
  - Converter Station located in New Haven, VT

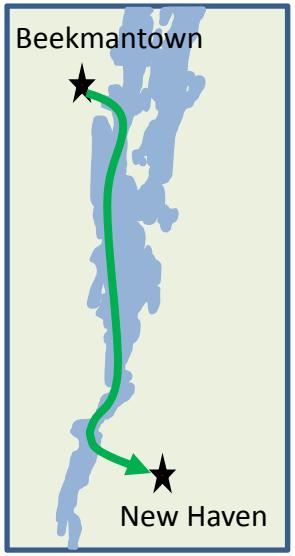

Vermont Land-Route Details

- Addison County
- Ferrisburgh, Vergennes, Waltham, New Haven
- Landfall at Ferrisburgh, VT
- Use of Public Rights-of-Way
  - Local Roads (~ 7 miles)
  - US Route 7 (~ 6 miles)
  - VT Route 17 (<0.5 mile)
- Railroad Crossings (3)
  - VTrans/Vermont Railway in Ferrisburgh and New Haven
- Burial Depth: typically 4 feet below grade

Proposed Vermont Land Route

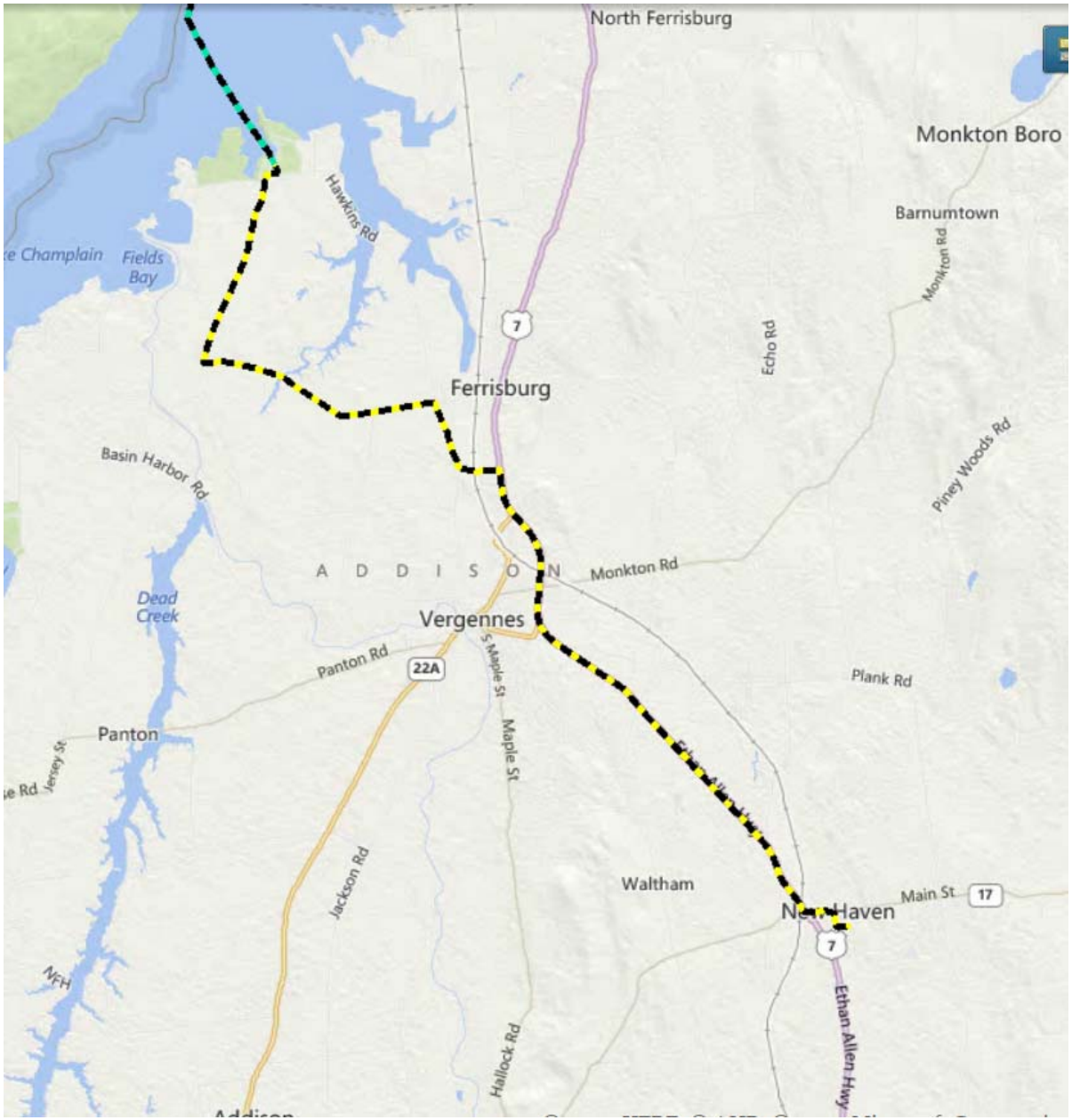

Terrestrial Construction Methodology

- Conventional cut-and-cover of concrete encased conduit (Duct Bank)
  - In road construction
- Horizontal Directional Drill (HDD) or Jack and Bore
  - Landfall Location
  - Environmentally Sensitive Areas (streams, wetlands, etc.)
  - Railroad Crossing (3)

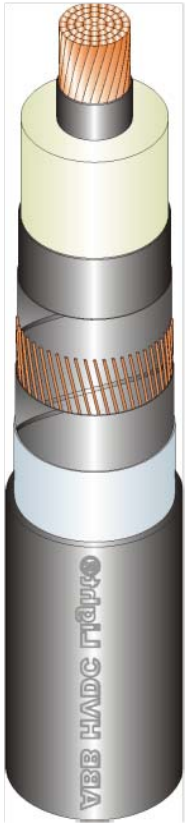

Concrete Encased Duct Banks

- Limits the length and time that trenches will be open for public safety
- Provides mechanical protection for the cable from vehicle loading.
- Provides Thermal Stability to Cable System
- Allows for easier access and less environmental disturbance in the event that a cable repair is necessary post installation

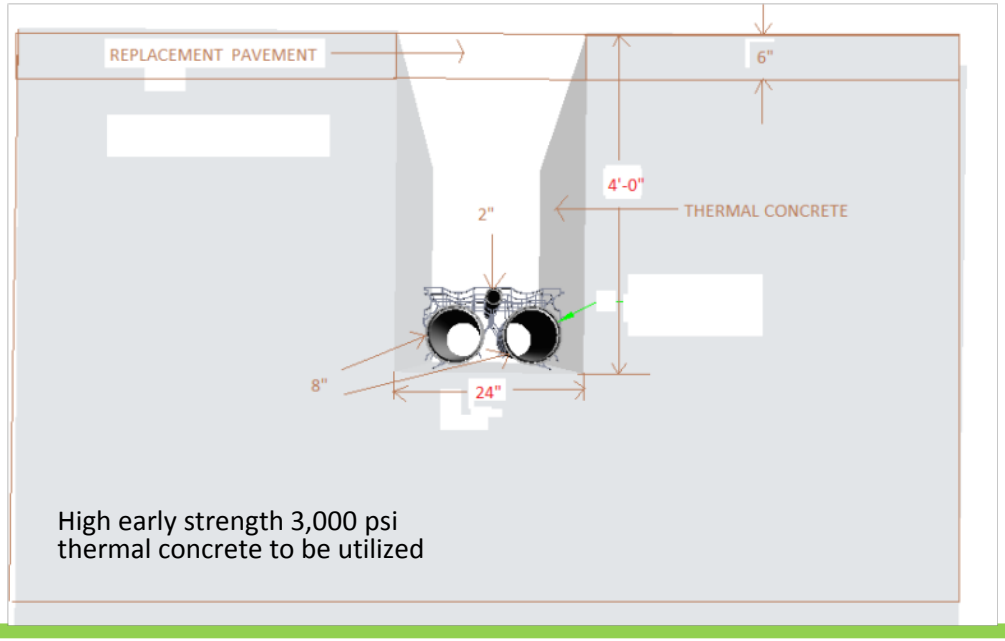

Splice Pits

- Cable splices will occur approximately every ½ mile
- Splice pits will be utilized at each splice location, using precast and/or cast-in-place concrete boxes, backfilled with thermal fill and surface conditions restored (no above-ground manhole/structure)

[UPDATED METHOD DISCUSSED DURING 7/24 MEETING—SPECIFICATIONS BELOW ARE NO LONGER VALID]

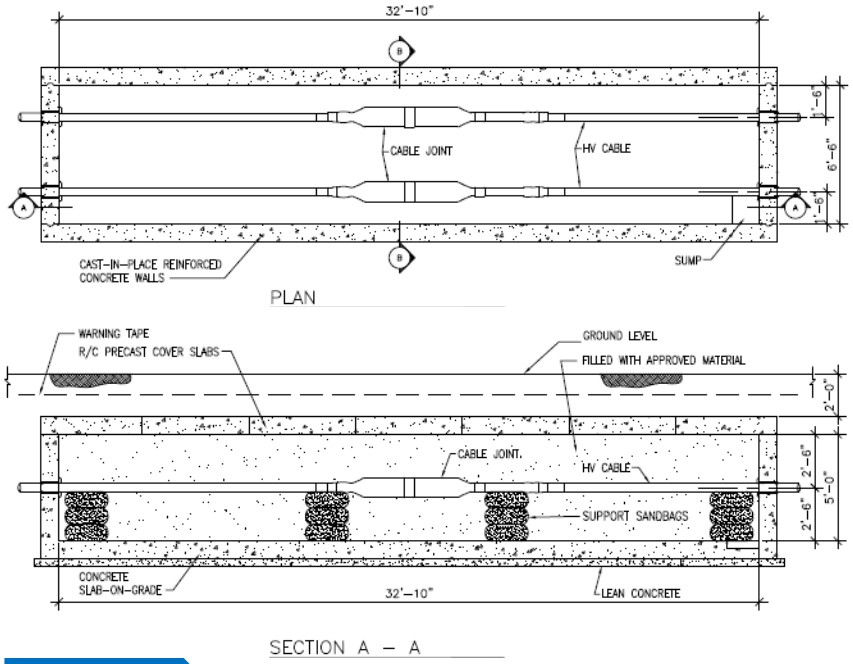

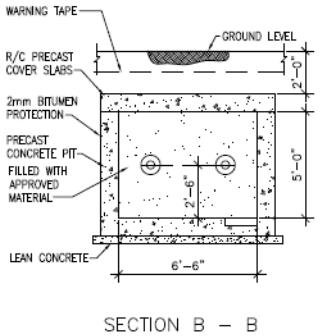

Horizontal Directional Drilling

- Entry/exit angle for all HDD's shall be 12 to 16 degrees.
- Clearance below stream: 10 to 12 feet.
- Clearance below rails: as required by the railroad company.
- Clearance below utilities and other structures: 5 feet.
- HDD shall not be less than 10 feet below roadways and 5 feet below culverts.
- Railroad tracks shall be crossed between 45 and 90 degrees, where possible.
- HDD or Jack and Bore shall be utilized to cross under railroad tracks based on railroad specifications.

Construction Process

- Approximately 150-500 feet of duct bank construction per day
- Temporary cover with plating or patch
- Once duct bank and splice pit installation is complete, final pavement restoration will occur.
- HVDC cables will be pulled into conduits and prepared for splicing
- Splicing will take approximately 6 days
- When the splice is complete, splice pit will be backfilled and restored.

Traffic Control

- Temporary lane closures will be required during in-road construction
- Traffic will be managed according to the Manual on Uniform Traffic Control Devices
- A Maintenance and Protection of Traffic Plan will be developed and submitted to VTrans for review and approval

Permitting Overview
Comprehensive Plan

- Vermont
  - VT Section 248
  - VTrans 1111 Permit
  - Railroad Lands and Crossings Permit (5 VSA § 3406)
  - Additional State Required Permits
- New York
  - Article VII & 401 WQC
  - Office of General Services Lands Underwater Easement
  - Additional State Required Permits
- Federal
  - CWA Section 404/Section 10 (NY and New England Districts)
  - NEPA, Section 7 (ESA), Section 106 (NHPA)

Project Schedule

- Milestone Schedule:
  - Applications Filed: Q1/Q2, 2016
  - Landfall Preparation/Temporary Cofferdams: 2017
  - Cable Installation: 2018
  - In Service Date: Q4, 2019

- Activities Completed to date:
  - Preliminary route design, desktop assessment, and alternatives analysis
  - Pre-application meeting with NYDPS, VT ANR, and US Army Corps of Engineers
  - Ongoing stakeholder outreach and communication

Next Steps

- Routing refinement and continued agency engagement and alternatives analysis
- Natural Resource field surveys, including wetland and stream delineation, T&E species, significant natural communities
- Archeological Phase 1A and Phase 1B Survey Plan/Survey
- Lake geophysical and geotechnical investigation

Contact Information

Bryan Sanderson

Anbaric Transmission
401 Edgewater Place, Suite 650
Wakefield, MA 01880

Direct: (781) 683-0709

bsanderson@anbaricpower.com

www.AnbaricTransmission.com